Deye®

Hybrid Inverter

SUN-5K-SG04LP3-EU

SUN-6K-SG04LP3-EU

SUN-8K-SG04LP3-EU

SUN-10K-SG04LP3-EU

SUN-12K-SG04LP3-EU

User Manual

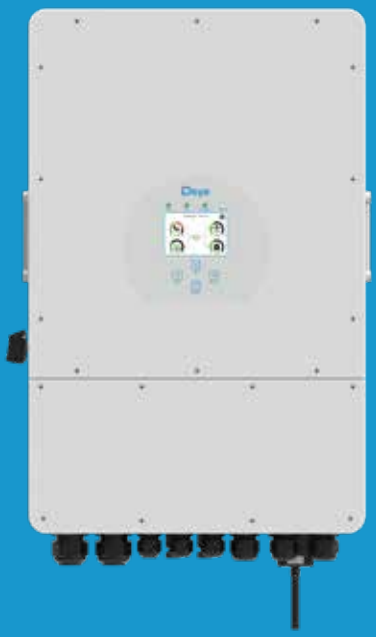

Contents

1. Safety Introductions 01
2. Product instructions 01-04
2.1 Product Overview
2.2 Product Size
2.3 Product Features
2.4 Basic System Architecture
3. Installation 05-24
3.1 Parts list
3.2 Mounting instructions
3.3 Battery connection
3.4 Grid connection and backup load connection
3.5 PV Connection
3.6 CT Connection
3.6.1 Meter Connection
3.7 Earth Connection(mandatory)
3.8 WIFI Connection
3.9 Wiring System for Inverter
3.10 Wiring diagram
3.11 Typical application diagram of diesel generator
3.12 phase parallel connection diagram
4. OPERATION 25
4.1 Power ON/OFF
4.2 Operation and Display Panel
5. LCD Display Icons 26-38
5.1 Main Screen
5.2 Solar Power Curve
5.3 Curve Page-Solar & Load & Grid
5.4 System Setup Menu
5.5 Basic Setup Menu
5.6 Battery Setup Menu
5.7 System Work Mode Setup Menu
5.8 Grid Setup Menu
5.9 Generator Port Use Setup Menu
5.10 Advanced Function Setup Menu
5.11 Device Info Setup Menu
6. Mode 38-39
7. Limitation of Liability 39-43
8. Datasheet 44-45
9. Appendix I 46-47
10. Appendix II 48

About This Manual

The manual mainly describes the product information, guidelines for installation, operation and maintenance. The manual cannot include complete information about the photovoltaic (PV) system.

How to Use This Manual

Read the manual and other related documents before performing any operation on the inverter. Documents must be stored carefully and be available at all times.

Contents may be periodically updated or revised due to product development. The information in this manual is subject to change without notice. The latest manual can be acquired via service@deye.com.cn

1. Safety Introductions

· This chapter contains important safety and operating instructions. Read and keep this manual for future reference.
· Before using the inverter, please read the instructions and warning signs of the battery and corresponding sections in the instruction manual.
· Do not disassemble the inverter. If you need maintenance or repair, take it to a professional service center.
· Improper reassembly may result in electric shock or fire.
· To reduce risk of electric shock, disconnect all wires before attempting any maintenance or cleaning. Turning off the unit will not reduce this risk.
· Caution: Only qualified personnel can install this device with battery.
· Never charge a frozen battery.
· For optimum operation of this inverter, please follow required specification to select appropriate cable size. It is very important to correctly operate this inverter.
· Be very cautious when working with metal tools on or around batteries. Dropping a tool may cause a spark or short circuit in batteries or other electrical parts, even cause an explosion.
· Please strictly follow installation procedure when you want to disconnect AC or DC terminals. Please refer to "Installation" section of this manual for the details.
· Grounding instructions - this inverter should be connected to a permanent grounded wiring system. Be sure to comply with local requirements and regulation to install this inverter.
· Never cause AC output and DC input short circuited. Do not connect to the mains when DC input short circuits.

2. Product Introduction

This is a multifunctional inverter, combining functions of inverter, solar charger and battery charger to offer uninterruptible power support with portable size. Its comprehensive LCD display offers user configurable and easy accessible button operation such as battery charging, AC/solar charging, and acceptable input voltage based on different applications.

2.1 Product Overview

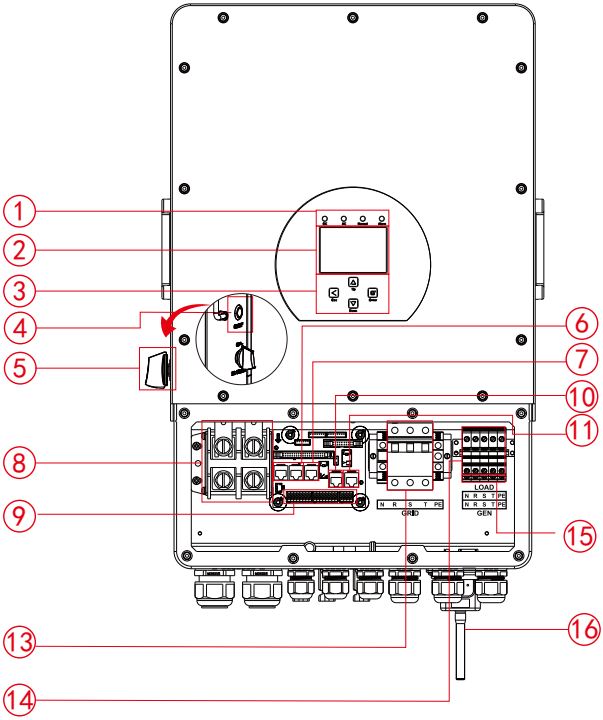

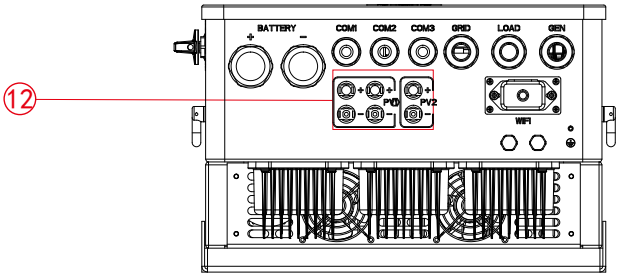

1: Inverter indicators
2: LCD display
3: Function buttons
4: Power on/off button
5: DC switch
6: Parallel port
7: Meter-485 port
8: Battery input connectors
9: Function port
10: ModeBUS port
11: BMS port
12: PV input with two MPPT
13: *Circuit breaker of Grid
14: Load
15: Generator input
16: WiFi Interface

* for some hardware versions, the circuit breaker of Grid is not existed

2.2 Product Size

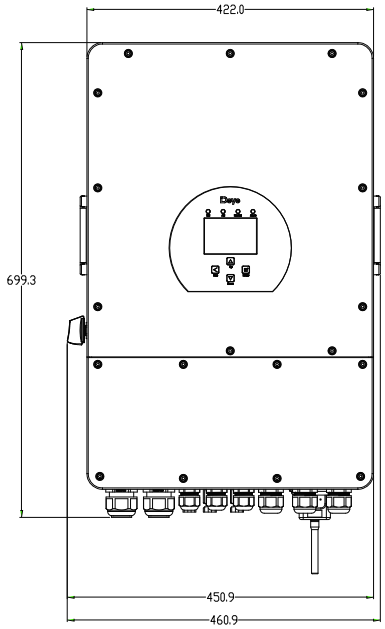

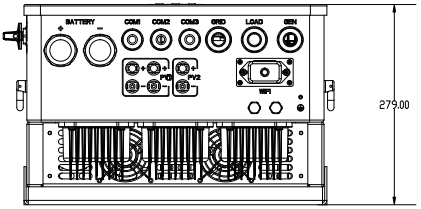

Inverter Size

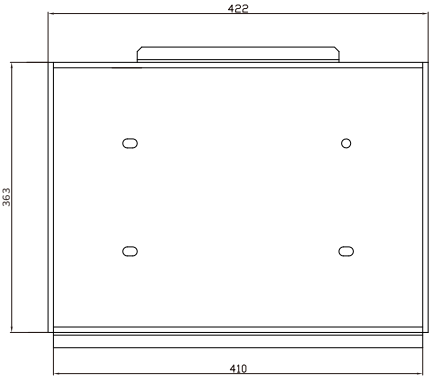

Mounting bracket

2.3 Product Features

- 230V/400V Three phase Pure sine wave inverter.
- Self-consumption and feed-in to the grid.
- Auto restart while AC is recovering.
- Programmable supply priority for battery or grid.
- Programmable multiple operation modes: On grid, off grid and UPS.
- Configurable battery charging current/voltage based on applications by LCD setting.
- Configurable AC/Solar/Generator Charger priority by LCD setting.
- Compatible with mains voltage or generator power.
- Overload/over temperature/short circuit protection.
- Smart battery charger design for optimized battery performance
- With limit function, prevent excess power overflow to the grid.
- Supporting WIFI monitoring and build-in 2 strings for 1 MPP tracker, 1 string for 1 MPP tracker.
- Smart settable three stages MPPT charging for optimized battery performance.
- Time of use function.
- Smart Load Function.

2.4 Basic System Architecture

The following illustration shows basic application of this inverter.
It also includes following devices to have a Complete running system.
- Generator or Utility
- PV modules

Consult with your system integrator for other possible system architectures depending on your requirements.
This inverter can power all kinds of appliances in home or office environment, including motor type appliances such as refrigerator and air conditioner.

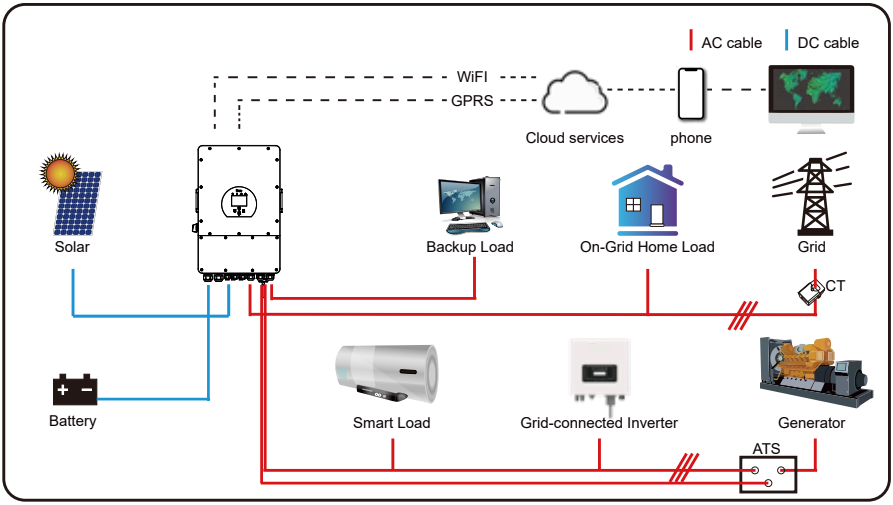

3. Installation

3.1 Parts List

Check the equipment before installation. Please make sure nothing is damaged in the package. You should have received the items in the following package:

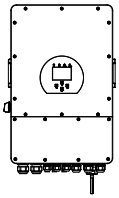

Hybrid inverter
x1

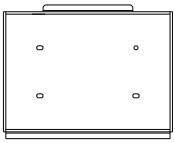

Wall mounting bracket x1

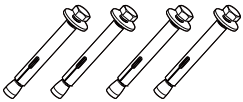

Stainless steel anti-collision bolt M8×80
x4

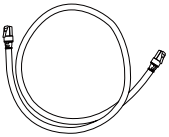

Parallel communication cable x1

L-type Hexagon wrench
x1

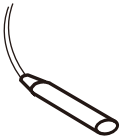

Battery temperature sensor
x1

User manual x1

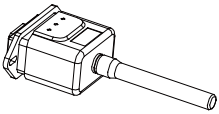

Wi-Fi-Plug (optional) x1

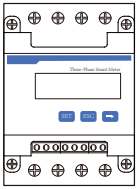

Meter(optional)
x 1

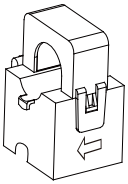

Sensor Clamp
x 3

3.2 Mounting instructions

Installation Precaution

This Hybrid inverter is designed for outdoor use(IP65), Please make sure the installation site meets below conditions:

· Not in direct sunlight
· Not in areas where highly flammable materials are stored.
· Not in potential explosive areas.
· Not in the cool air directly.
· Not near the television Antenna or antenna cable.
· Not higher than altitude of about 2000 meters above sea level.
· Not in environment of precipitation or humidity(>95%)

Please AVOID direct sunlight, rain exposure, snow laying up during installation and operation. Before connecting all wires, please take off the metal cover by removing screws as shown below:

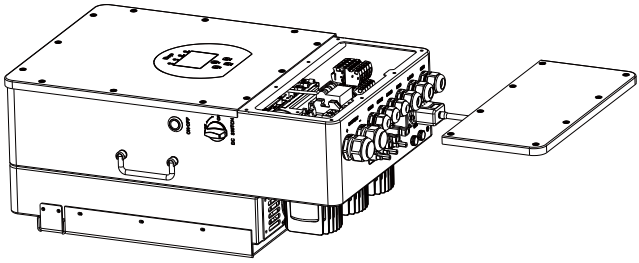

Considering the following points before selecting where to install:

· Please select a vertical wall with load-bearing capacity for installation, suitable for installation on concrete or other non-flammable surfaces,installation is shown below.
· Install this inverter at eye level in order to allow the LCD display to be read at all times.
· The ambient temperature should be between -25~60℃ to ensure optimal operation.
· Be sure to keep other objects and surfaces as shown in the diagram to guarantee sufficient heat dissipation and have enough space for removing wires.

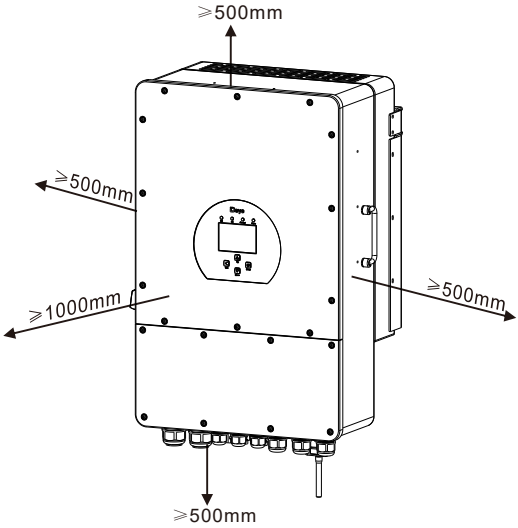

For proper air circulation to dissipate heat, allow a clearance of approx. 50cm to the side and approx. 50cm above and below the unit. And 100cm to the front.

Mounting the inverter

Remember that this inverter is heavy! Please be careful when lifting out from the package. Choose the recommend drill head(as shown in below pic) to drill 4 holes on the wall, 52-60mm deep.

1. Use a proper hammer to fit the expansion bolt into the holes.
2. Carry the inverter and holding it, make sure the hanger aim at the expansion bolt,fix the inverter on the wall.
3. Fasten the screw head of the expansion bolt to finish the mounting.

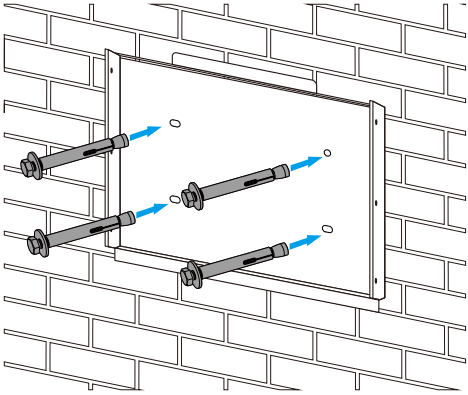

Inverter hanging plate installation

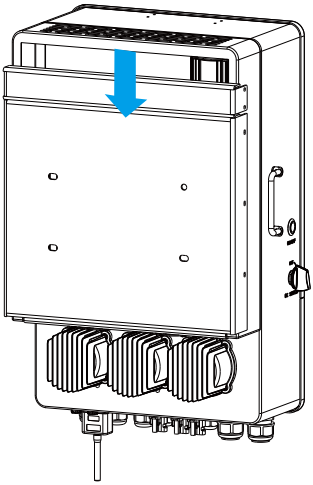

3.3 Battery connection

For safe operation and compliance, a separate DC over-current protector or disconnect device is required between the battery and the inverter. In some applications, switching devices may not be required but over-current protectors are still required. Refer to the typical amperage in the table below for the required fuse or circuit breaker size.

Model	*Wire Size*	*Cable(mm²)*	*Torque value(max)*
5Kw	2AWG	35	24.5Nm
6Kw	1AWG	40	24.5Nm
8Kw	1AWG	40	24.5Nm
10Kw	1/0AWG	60	24.5Nm
12Kw	1/0AWG	60	24.5Nm

Chart 3-2 Cable size

All wiring must be performed by a professional person.

Connecting the battery with a suitable cable is important for safe and efficient operation of the system. To reduce the risk of injury, refer to Chart 3-2 for recommended cables.

Please follow below steps to implement battery connection:

1. Please choose a suitable battery cable with correct connector which can well fit into the battery terminals.
2. Use a suitable screwdriver to unscrew the bolts and fit the battery connectors in, then fasten the bolt by the screwdriver, make sure the bolts are tightened with torque of 24.5 N.M in clockwise direction.
3. Make sure polarity at both the battery and inverter is correctly connected.

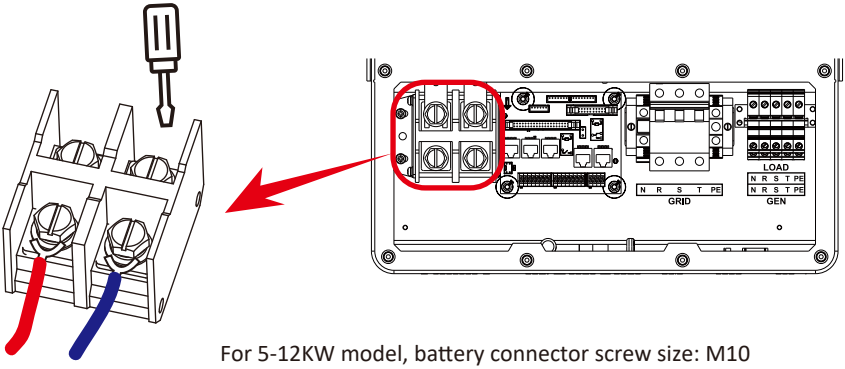

For 5-12KW model, battery connector screw size: M10

3. In case of children touch or insects go into the inverter, Please make sure the inverter connector is fasten to waterproof position by twist it clockwise.

Installation must be performed with care.

Before making the final DC connection or closing DC breaker/disconnect, be sure positive(+) must be connect to positive(+) and negative(-) must be connected to negative(-). Reverse polarity connection on battery will damage the inverter.

3.3.2 Function port definition

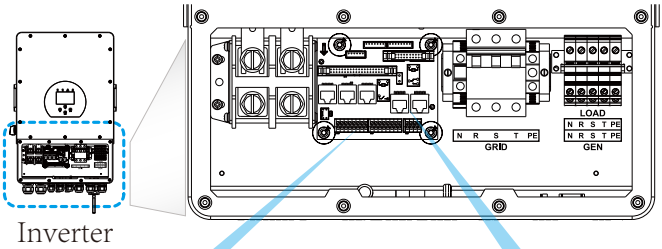

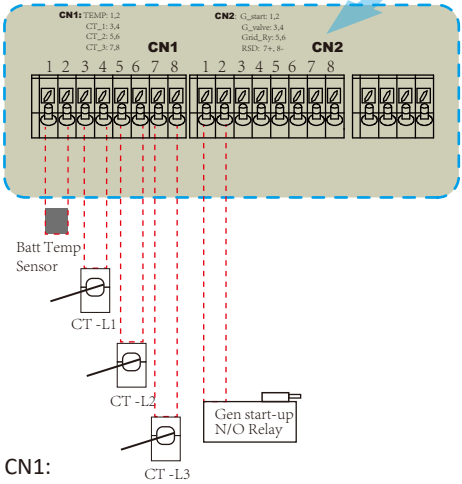

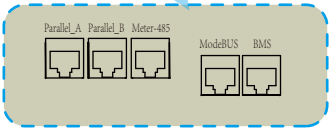

Parallel A: Parallel communication port 1 (CAN interface).
Parallel B: Parallel communication port 2 (CAN interface).
Meter_485: for energy meter communication.
ModeBUS: Reserved.
BMS: BMS port for battery communication(CAN/RS485).

CN1:
TEMP (1,2): battery temperature sensor for lead acid battery.
CT-L1 (3,4): current transformer (CT1) for“zero export to CT”mode clamps on L1 when in three phase system.
CT-L2 (5,6): current transformer (CT2) for“zero export to CT”mode clamps on L2 when in three phase system.
CT-L3 (7,8): current transformer (CT3) for“zero export to CT”mode clamps on L3 when in three phase system.

CN2:
G-start (1,2): dry contact signal for startup the diesel generator.
When the "GEN signal" is active, the open contact (GS) will switch on (no voltage output).
G-valve (3,4): reserved.
Grid_Ry (5,6):
RSD (7,8): When battery is connected and the inverter is in "ON" status, it will provide 12Vdc.

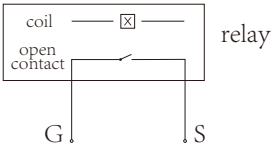

GS (diesel generator startup signal)

3.3.3 Temperature sensor connection for lead-acid battery

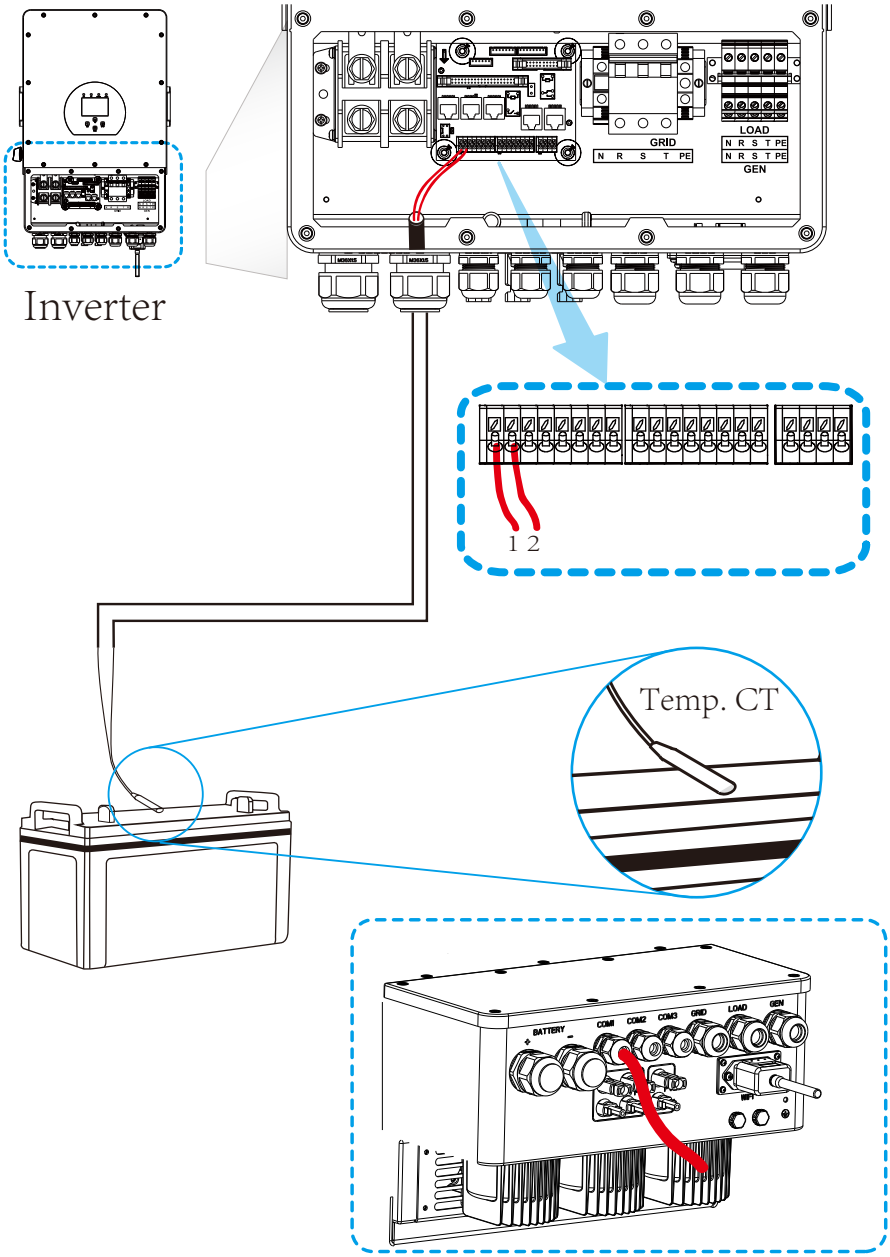

3.4 Grid connection and backup load connection

· Before connecting to grid, please install a separate AC breaker between inverter and grid. Also, it is recommended that installs an AC breaker between backup load and inverter.This will ensure the inverter can be securely disconnected during maintenance and fully protected from over current.The recommended of AC breaker for the load port is 20A for 8kw, 32A for 10kw and 32A for 12KW. The recommended of AC breaker for the grid port is 63A for 8kw, 63A for 10kw and 63A for 12KW.

· There are three terminal blocks with "Grid" "Load"and "GEN" markings. Please do not misconnect input and output connectors.

All wiring must be performed by a qualified personnel.It is very important for system safety and efficient operation to use appropriate cable for AC input connection. To reduce risk of injury, please use the proper recommended cable as below.

backup load connection

Model	*Wire Size*	*Cable(mm²)*	*Torque value(max)*
5/6/8/10/12KW	10AWG	4	1.2Nm

Grid connection

Model	*Wire Size*	*Cable(mm²)*	*Torque value(max)*
5/6/8/10/12KW	10AWG	6	1.2Nm

Chart 3-3 Recommended Size for AC wires

Please follow below steps to implement Grid, load and Gen port connection:

1. Before making Grid, load and Gen port connection, be sure to turn off AC baeaker or disconnector first.
2. Remove insulation sleeve 10mm length, unscrew the bolts, insert the wires according to polarities indicated on the terminal block and tighten the terminal screws. Make sure the connection is complete.

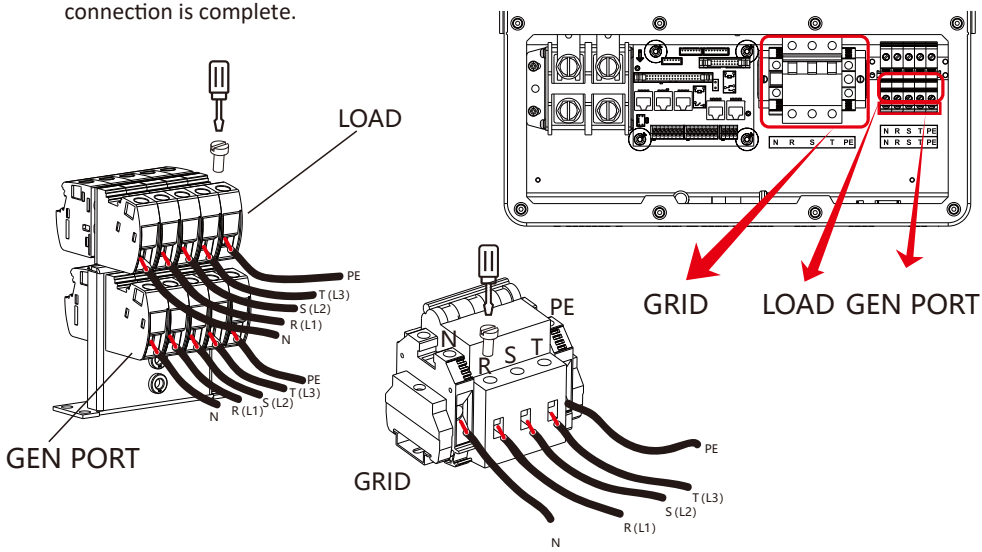

Be sure that AC power source is disconnected before attempting to wire it to the unit.

3. Then, insert AC output wires according to polarities indicated on the terminal block and tighten terminal. Be sure to connect corresponding N wires and PE wires to related terminals as well.
4. Make sure the wires are securely connected.
5. Appliances such as air conditioner are required at least 2-3 minutes to restart because it is required to have enough time to balance refrigerant gas inside of circuit. If a power shortage occurs and recovers in short time, it will cause damage to your connected appliances. To prevent this kind of damage, please check manufacturer of air conditioner if it is equipped with time-delay function before installation. Otherwise, this inverter will trigger overload fault and cut off output to protect your appliance but sometimes it still causes internal damage to the air conditioner

3.5 PV Connection

Before connecting to PV modules, please install a separately DC circuit breaker between inverter and PV modules. It is very important for system safety and efficient operation to use appropriate cable for PV module connection. To reduce risk of injury, please use the proper recommended cable size as below.

Model	***Wire Size***	***Cable(mm²)***
5/6/8/10/12KW	12AWG	4

Chart 3-4 Cable size

To avoid any malfunction, do not connect any PV modules with possible current leakage to the inverter. For example, grounded PV modules will cause current leakage to the inverter. When using PV modules, please be sure NO grounding.

It is requested to use PV junction box with surge protection. Otherwise, it will cause damage on inverter when lightning occurs on PV modules.

3.5.1 PV Module Selection:

When selecting proper PV modules, please be sure to consider below parameters:

1) Open circuit Voltage (Voc) of PV modules not exceeds max. PV array open circuit voltage of inverter.
2) Open circuit Voltage (Voc) of PV modules should be higher than min. start voltage.

Inverter Model	*5KW*	*6KW*	*8KW*	*10KW*	*12KW*
PV Input Voltage	550V (160V~800V)				
PV Array MPPT Voltage Range	200V-650V				
No. of MPP Trackers	2				
No. of Strings per MPP Tracker	1+1	1+1	1+1	2+1	2+1

Chart 3-5

3.5.2 PV Module Wire Connection:

1. Switch the Grid Supply Main Switch(AC)OFF.
2. Switch the DC Isolator OFF.
3. Assemble PV input connector to the inverter.

Safety Hint:
Please don't connect PV array positive or negative pole to the ground, it could cause serious damages to the inverter.

Safety Hint:
Before connection, please make sure the polarity of the output voltage of PV array matches the "DC+" and "DC-" symbols.

Safety Hint:
Before connecting inverter, please make sure the PV array open circuit voltage is within the 1000V of the inverter.

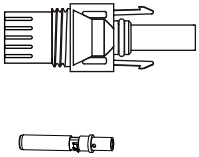

Pic 5.1 DC+ male connector (MC4)

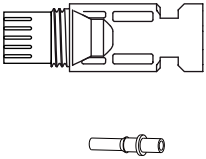

Pic 5.2 DC- female connector (MC4)

Safety Hint:
Please use approved DC cable for PV system.

Cable type	***Cross section*** （mm^2）	
	Range	***Recommended value***
Industry generic PV cable (model: PV1-F)	4.0~6.0 (12~10AWG)	4.0(12AWG)

Chart 3-6

The steps to assemble the DC connectors are listed as follows:
a) Strip off the DC wire about 7mm, disassemble the connector cap nut (see picture 5.3).

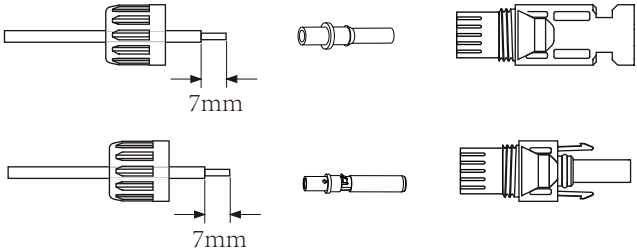

Pic 3.3 Disassemble the connector cap nut

b) Crimping metal terminals with crimping pliers as shown in picture 5.4.

Pic 3.4 Crimp the contact pin to the wire

c) Insert the contact pin to the top part of the connector and screw up the cap nut to the top part of the connector. (as shown in picture 5.5).

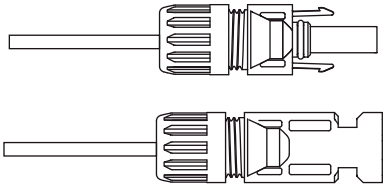

Pic 3.5 connector with cap nut screwed on

d) Finally insert the DC connector into the positive and negative input of the inverter, shown as picture 5.6

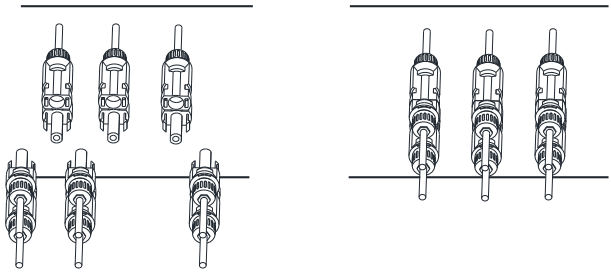

Pic 3.6 DC input connection

Warning:
Sunlight shines on the panel will generate voltage, high voltage in series may cause danger to life. Therefore, before connecting the DC input line, the solar panel needs to be blocked by the opaque material and the DC switch should be 'OFF', otherwise, the high voltage of the inverter may lead to life-threatening conditions.

Warning:
Use the DC power connector of the accessories. Do not interconnect the connectors of different manufacturers.

3.6 CT Connection

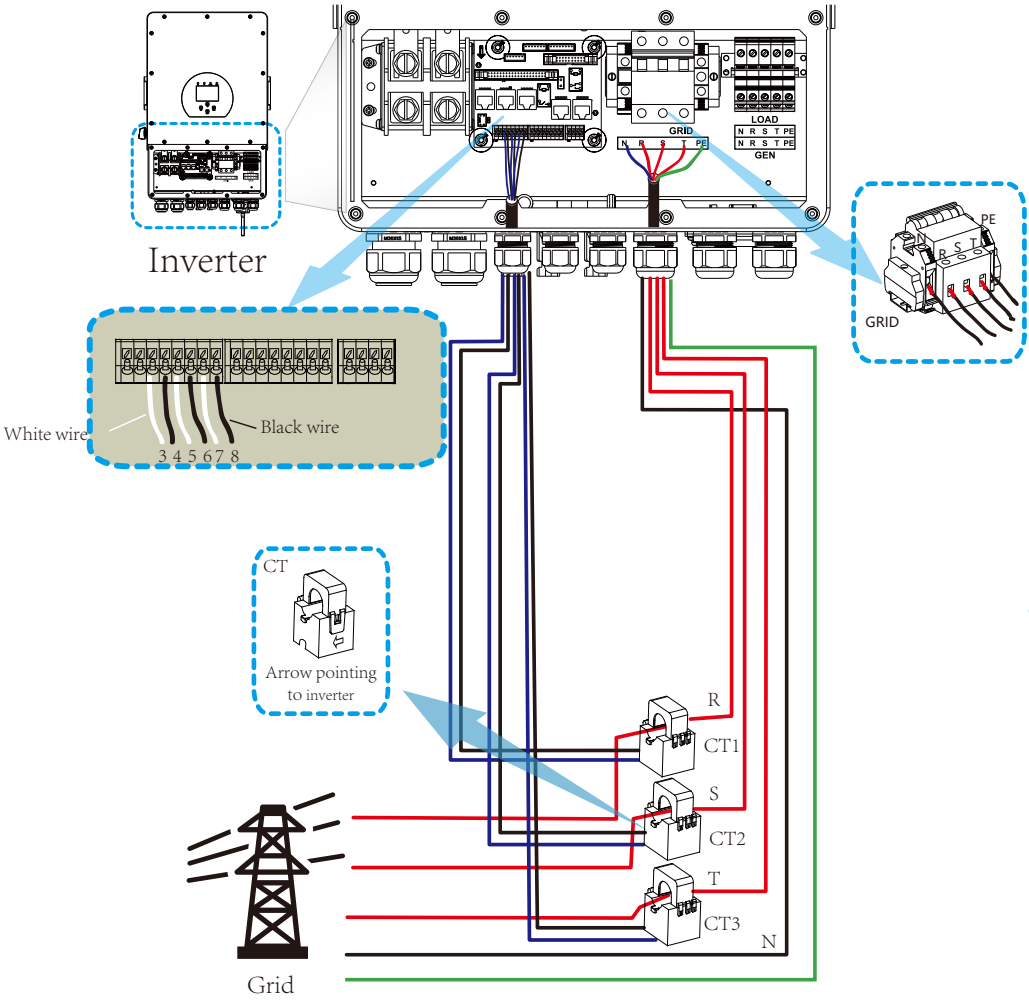

***Note： when the reading of the load power on the LCD is not correct, please reverse the CT arrow.**

3.6.1 Meter Connection

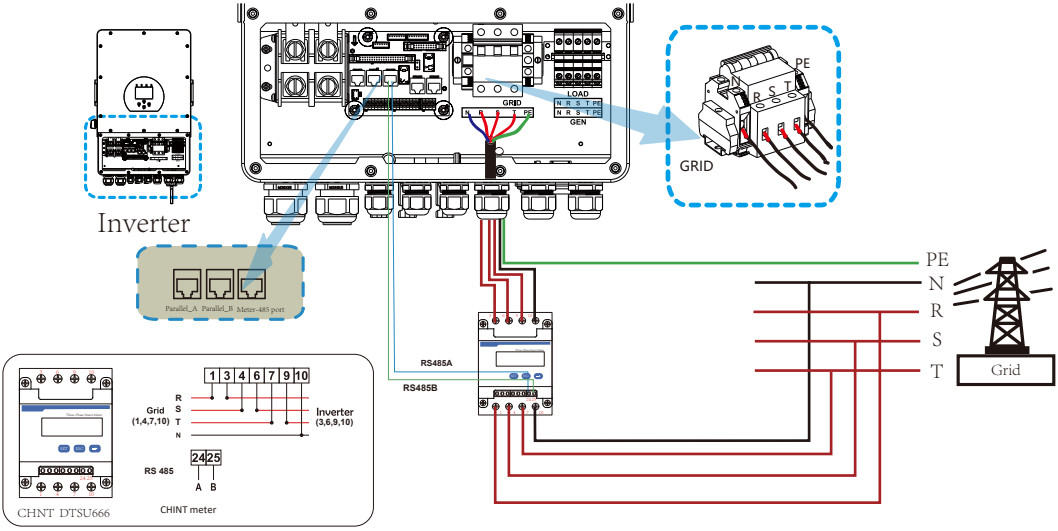

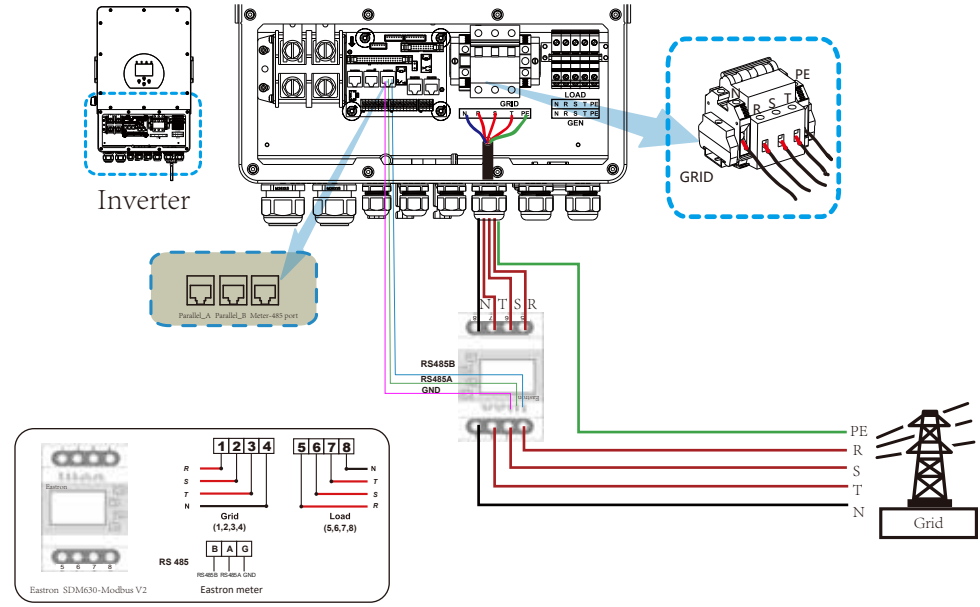

Note:
When the inverter is in the off-grid state, the N line needs to be connected to the earth.

Note:
In final installation,breaker certified according to IEC 60947-1 and IEC 60947-2 shall be installed with the equipment.

3.7 Earth Connection(mandatory)

Ground cable shall be connected to ground plate on grid side this prevents electric shock. if the original protective conductor fails.

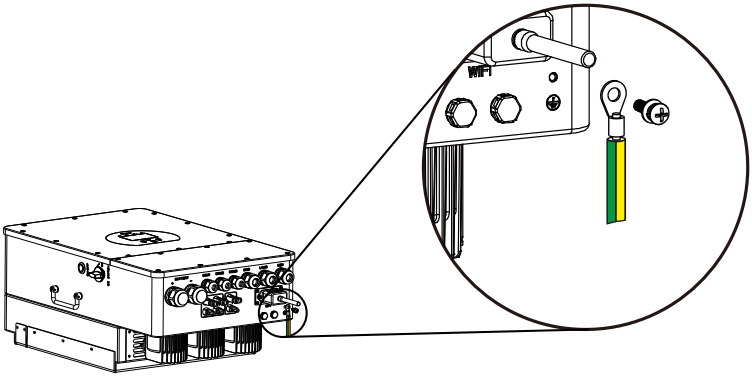

3.8 WIFI Connection

For the configuration of Wi-Fi Plug, please refer to illustrations of the Wi-Fi Plug.

3.9 Wiring System for Inverter

This diagram is an example for an application that neutral connects with the PE in a distribution box.

For countries such as Australia, New Zealand, South Africa, etc., please follow local wiring regulations!

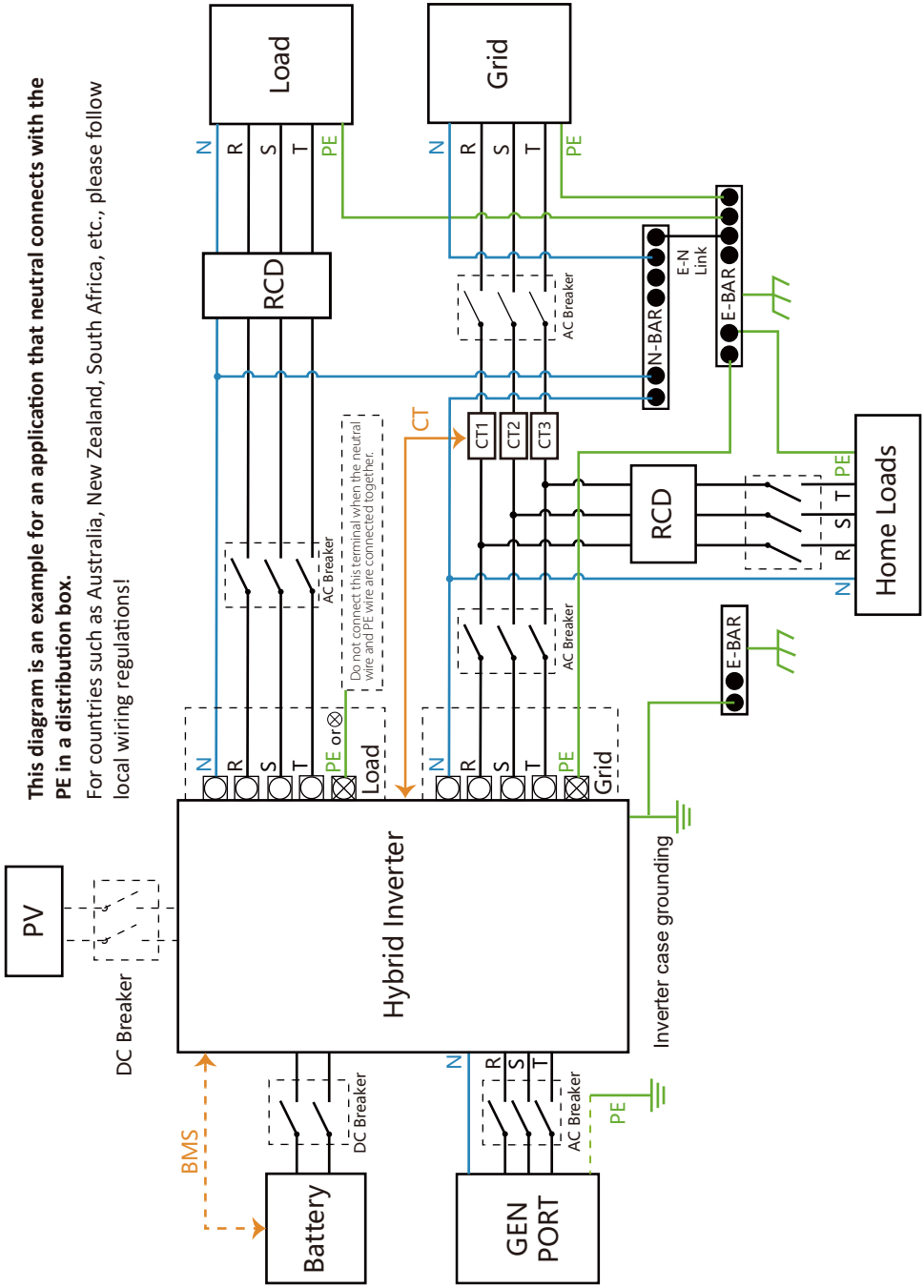

3.10 Wiring diagram

This diagram is an example for an application in which neutral is separated from the PE in the distribution box.

For countries such as China, Germany,the Czech Republic, Italy, etc., please follow local wiring reguations!

Note:Backup function is optional in German market.please leave backup side empty if backup function is not available in the inverter.

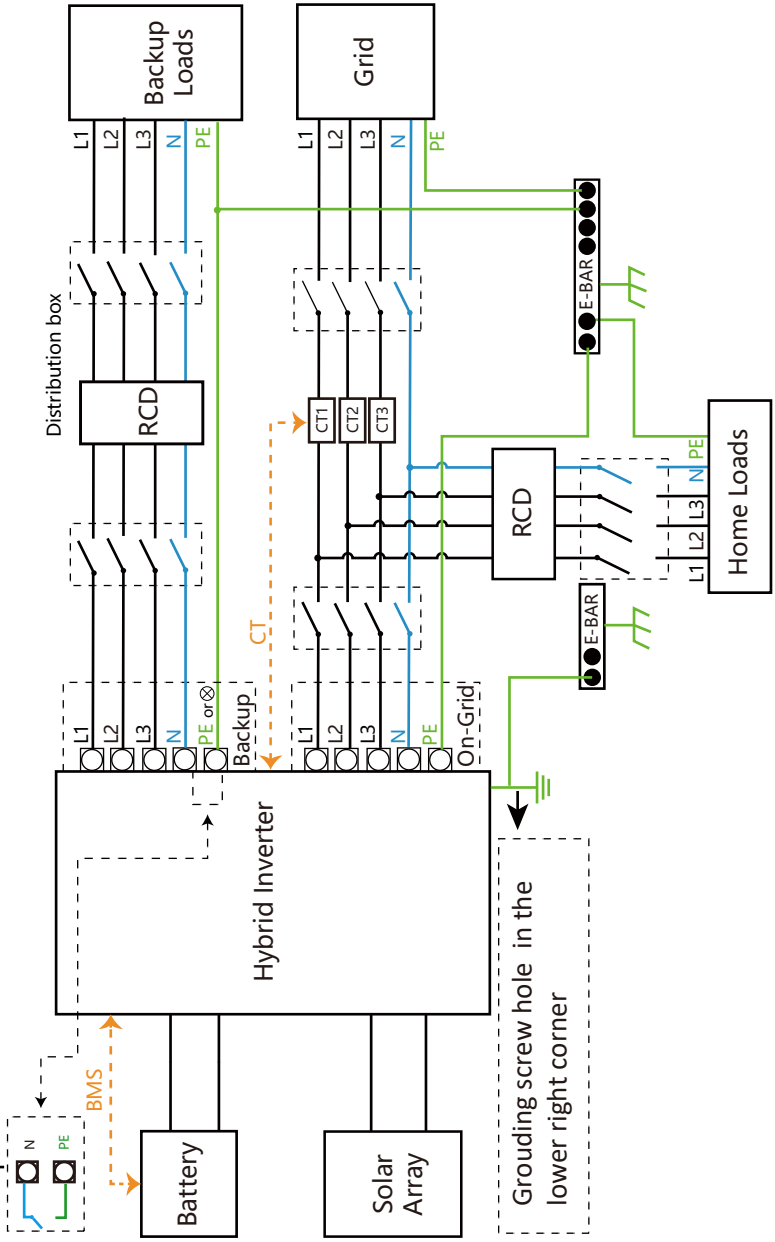

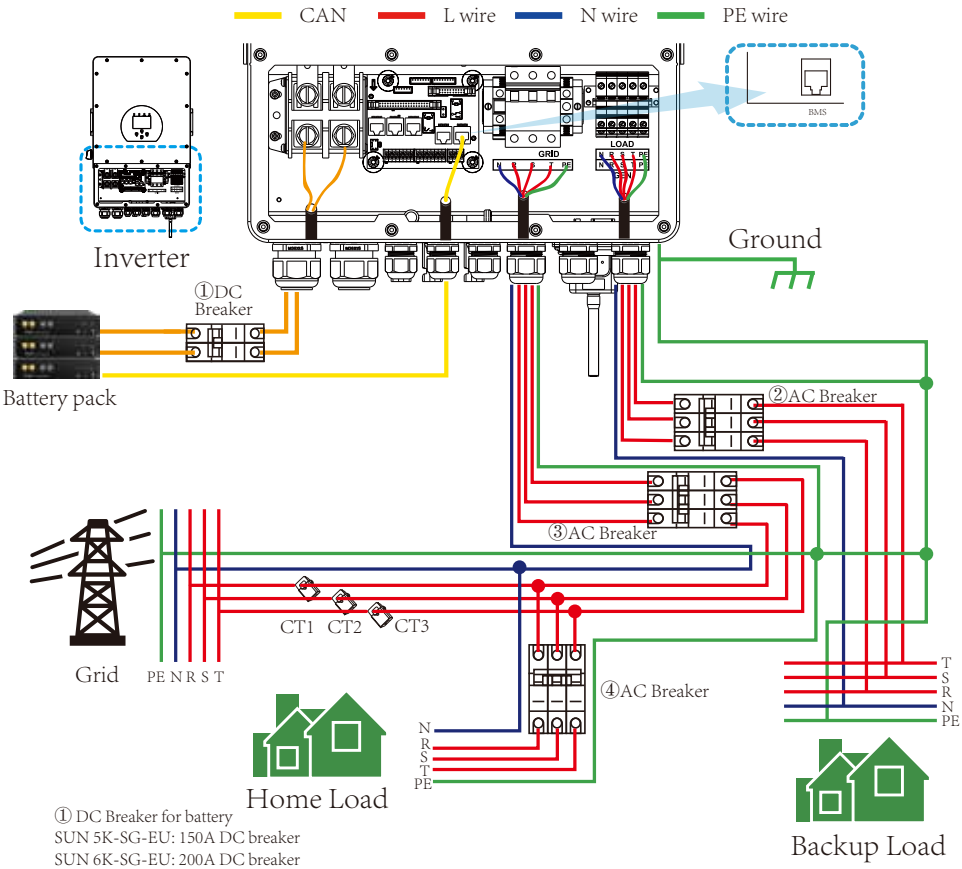

① DC Breaker for battery
SUN 5K-SG-EU: 150A DC breaker
SUN 6K-SG-EU: 200A DC breaker
SUN 8K-SG-EU: 250A DC breaker
SUN 10K-SG-EU:300A DC breaker
SUN 12K-SG-EU:300A DC breaker

② AC Breaker for backup load
SUN 5K-SG-EU: 16A AC breaker
SUN 6K-SG-EU: 16A AC breaker
SUN 8K-SG-EU: 20A AC breaker
SUN 10K-SG-EU:32A AC breaker
SUN 12K-SG-EU:32A AC breaker

③ AC Breaker for grid
SUN 5K-SG-EU: 63A AC breaker
SUN 6K-SG-EU: 63A AC breaker
SUN 8K-SG-EU: 63A AC breaker
SUN 10K-SG-EU: 63A AC breaker
SUN 12K-SG-EU: 63A AC breaker

④AC Breaker for home load
Depends on household loads

3.11 Typical application diagram of diesel generator

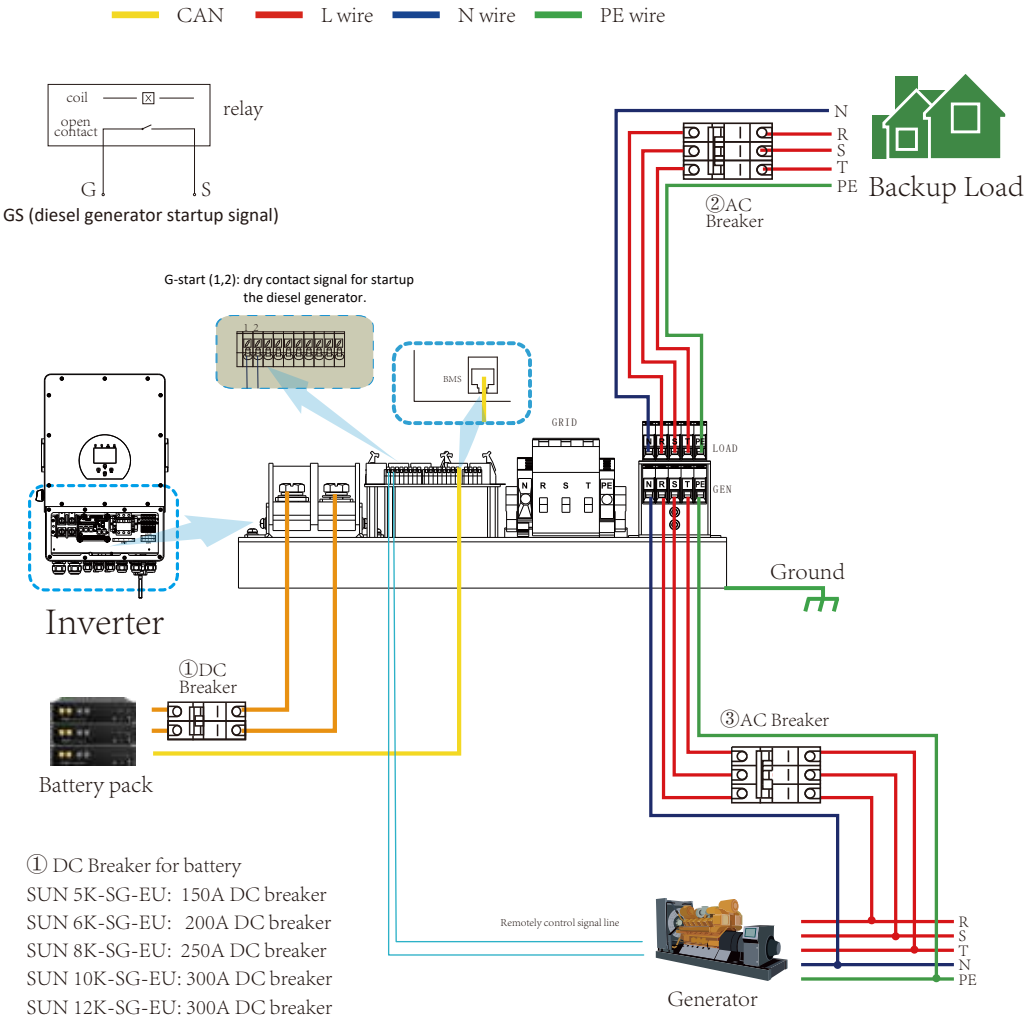

① DC Breaker for battery
SUN 5K-SG-EU: 150A DC breaker
SUN 6K-SG-EU: 200A DC breaker
SUN 8K-SG-EU: 250A DC breaker
SUN 10K-SG-EU: 300A DC breaker
SUN 12K-SG-EU: 300A DC breaker

② AC Breaker for backup load
SUN 5K-SG-EU: 16A AC breaker
SUN 6K-SG-EU: 16A AC breaker
SUN 8K-SG-EU: 20A AC breaker
SUN 10K-SG-EU: 32A AC breaker
SUN 12K-SG-EU: 32A AC breaker

③ AC Breaker for Generator port
SUN 5K-SG-EU: 63A AC breaker
SUN 6K-SG-EU: 63A AC breaker
SUN 8K-SG-EU: 63A AC breaker
SUN 10K-SG-EU: 63A AC breaker
SUN 12K-SG-EU: 63A AC breaker

3.12 Three phase parallel connection diagram

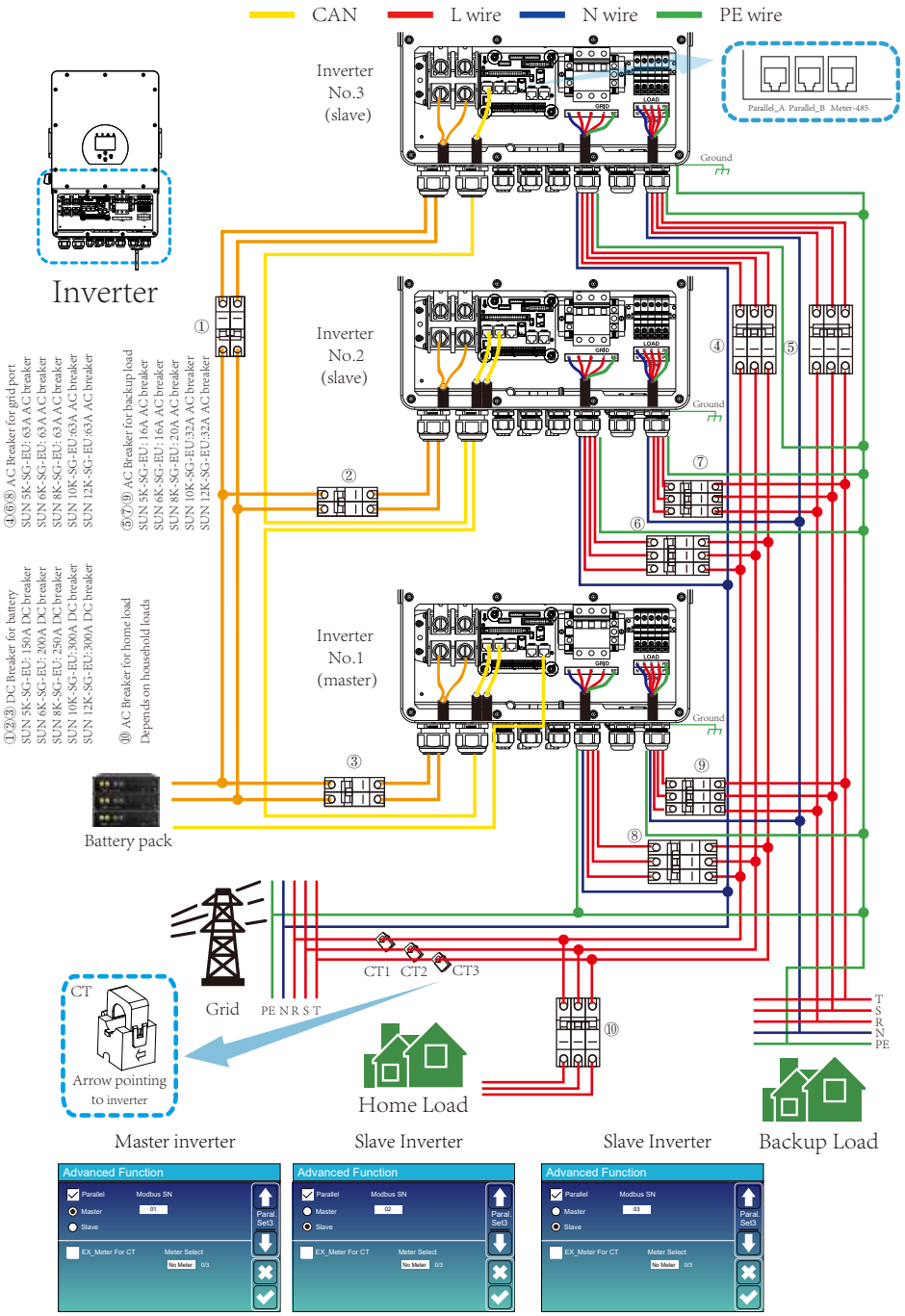

4. OPERATION

4.1 Power ON/OFF

Once the unit has been properly installed and the batteries are connected well, simply press On/Off button(located on the left side of the case) to turn on the unit. When system without battery connected, but connect with either PV or grid, and ON/OFF button is switched off, LCD will still light up(Display will show OFF), In this condition, when switch on ON/OFF button and select NO battery,system can still working.

4.2 Operation and Display Panel

The operation and display panel, shown in below chart, is on the front panel of the inverter. It includes four indicators, four function keys and a LCD display, indicating the operating status and input/output power information.

LED Indicator		***Messages***
DC	Green led solid light	PV Connection normal
AC	Green led solid light	Grid Connection normal
Normal	Green led solid light	Inverter operating normal
Alarm	Red led solid light	Malfunction or warning

Chart 4-1 LED indicators

Function Key	***Description***
Esc	To exit setting mode
Up	To go to previous selection
Down	To go to next selection
Enter	To confirm the selection

Chart 4-2 Function Buttons

5. LCD Display Icons

5.1 Main Screen

The LCD is touchscreen, below screen shows the overall information of the inverter.

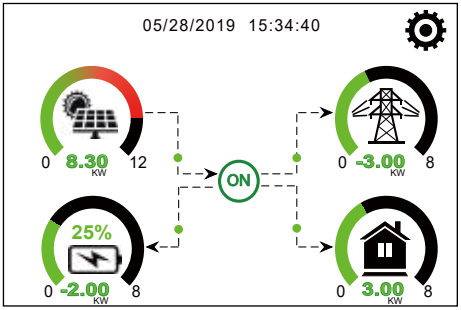

1.The icon in the center of the home screen indicates that the system is Normal operation. If it turns into "comm./F01~F64" , it means the inverter has communication errors or other errors, the error message will display under this icon(F01-F64 errors, detail error info can be viewed in the System Alarms menu).

2.At the top of the screen is the time.

3.System Setup Icon, Press this set button,you can enter into the system setup screen which including Basic Setup, Battery Setup, Grid Setup, System Work Mode, Generator port use, Advanced function and Li-Batt info.

4.The main screen showing the info including Solar, Grid, Load and Battery. Its also displaying the energy flow direction by arrow. When the power is approximate to high level, the color on the panels will changing from green to red so system info showing vividly on the main screen.

· PV power and Load power always keep positive.
· Grid power negative means sell to grid, positive means get from grid.
· Battery power negative means charge, positive means discharge.

5.1.1 LCD operation flow chart

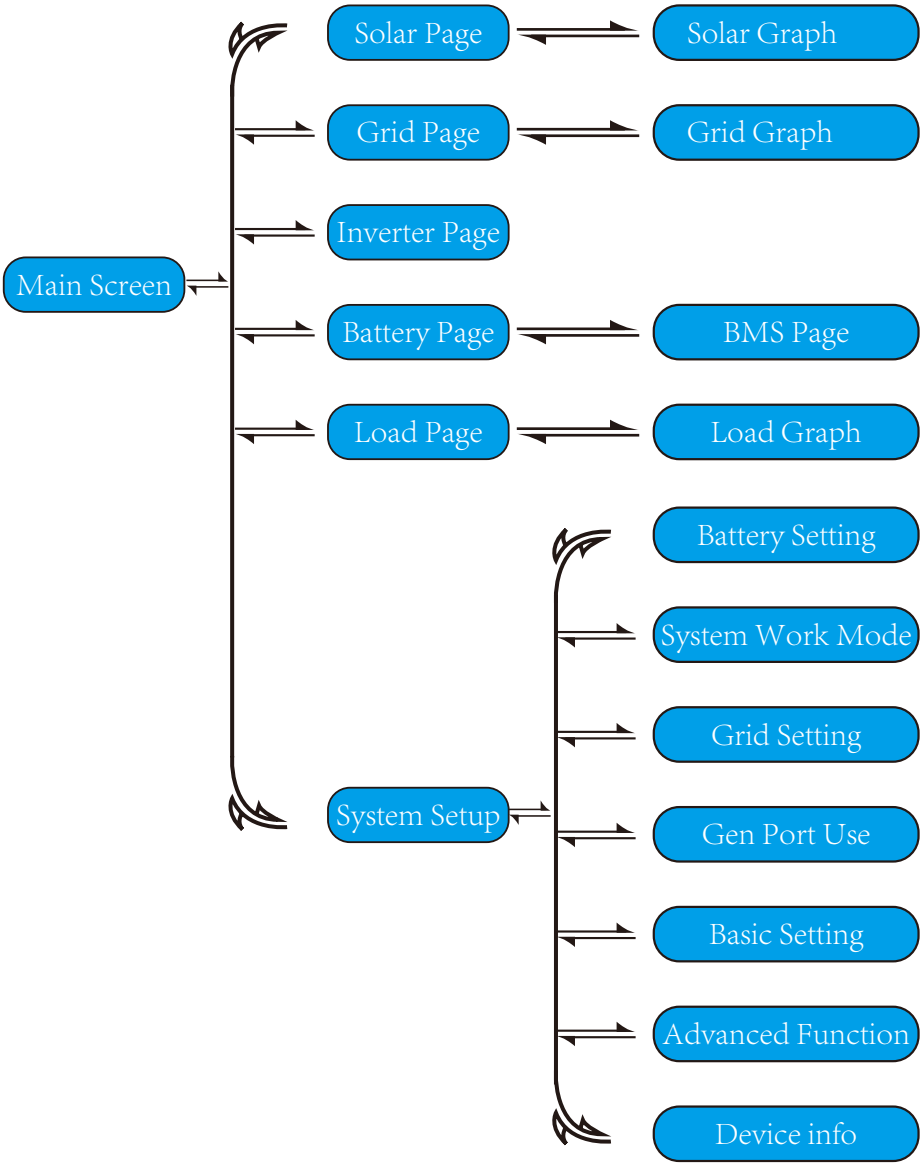

5.2 Solar Power Curve

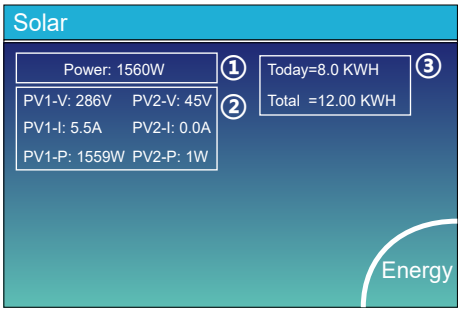

This is Solar Panel detail page.

① Solar Panel Generation.
② Voltage, Current, Power for each MPPT.
③ Solar Panel energy for Day and Total.

Press the "Energy "button will enter into the power curve page.

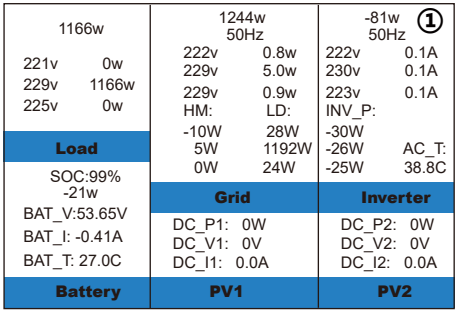

This is Inverter detail page.

① Inverter Generation.
Voltage, Current, Power for each Phase.
AC-T: mean Heat-sink temperature.

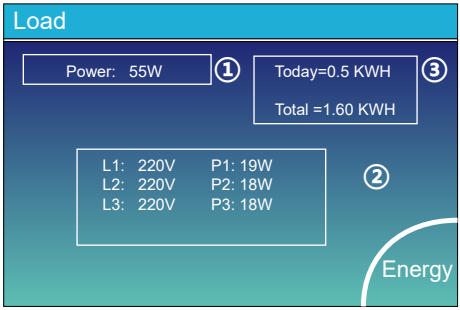

This is Back-up Load detail page.

① Back-up Power.
② Voltage, Power for each Phase.
③ Back-up consumption for Day and Total.

Press the "Energy " button will enter into the power curve page.

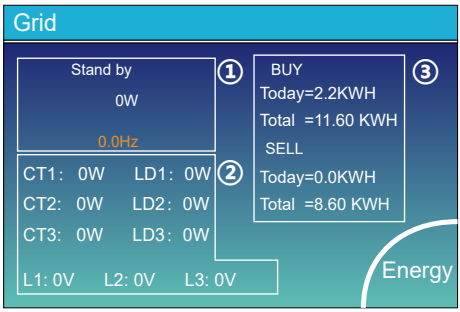

This is Grid detail page.

① Status, Power, Frequency.
② L: Voltage for each Phase
CT: Power detected by the external current sensors
LD: Power detected using internal sensors on AC grid in/out breaker
③ BUY: Energy from Grid to Inverter,
SELL: Energy from Inverter to grid.

Press the "Energy " button will enter into the power curve page.

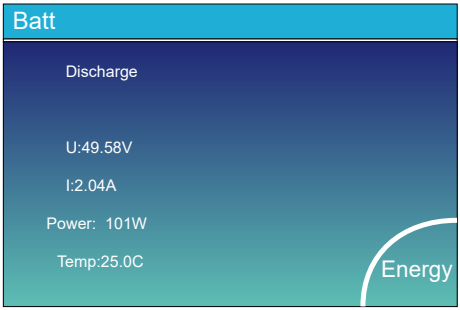

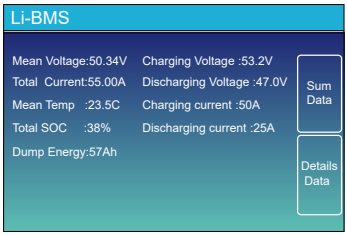

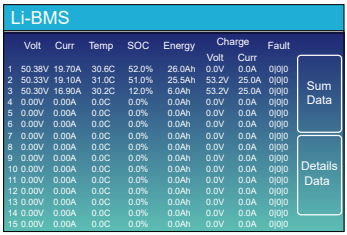

	Volt	Curr	Temp	SOC	Energy	Charge Volt	Charge Curr	Fault
1	50.38V	19.70A	30.6C	52.0%	26.0Ah	0.0V	0.0A	0|0|0
2	50.33V	19.10A	31.0C	51.0%	25.5Ah	53.2V	25.0A	0|0|0
3	50.30V	16.90A	30.2C	12.0%	6.0Ah	53.2V	25.0A	0|0|0
4	0.00V	0.00A	0.0C	0.0%	0.0Ah	0.0V	0.0A	0|0|0
5	0.00V	0.00A	0.0C	0.0%	0.0Ah	0.0V	0.0A	0|0|0
6	0.00V	0.00A	0.0C	0.0%	0.0Ah	0.0V	0.0A	0|0|0
7	0.00V	0.00A	0.0C	0.0%	0.0Ah	0.0V	0.0A	0|0|0
8	0.00V	0.00A	0.0C	0.0%	0.0Ah	0.0V	0.0A	0|0|0
9	0.00V	0.00A	0.0C	0.0%	0.0Ah	0.0V	0.0A	0|0|0
10	0.00V	0.00A	0.0C	0.0%	0.0Ah	0.0V	0.0A	0|0|0
11	0.00V	0.00A	0.0C	0.0%	0.0Ah	0.0V	0.0A	0|0|0
12	0.00V	0.00A	0.0C	0.0%	0.0Ah	0.0V	0.0A	0|0|0
13	0.00V	0.00A	0.0C	0.0%	0.0Ah	0.0V	0.0A	0|0|0
14	0.00V	0.00A	0.0C	0.0%	0.0Ah	0.0V	0.0A	0|0|0
15	0.00V	0.00A	0.0C	0.0%	0.0Ah	0.0V	0.0A	0|0|0

This is Battery detail page.

if you use Lithium Battery, you can enter BMS page.

5.3 Curve Page-Solar & Load & Grid

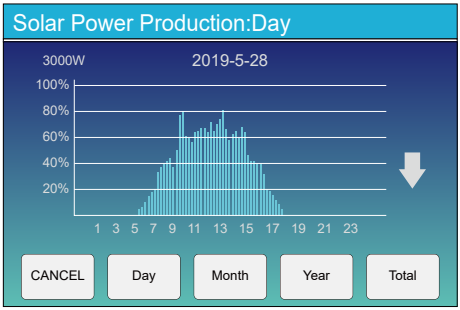

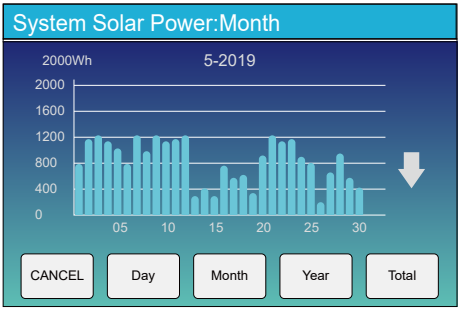

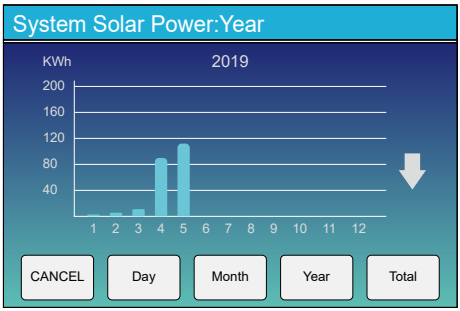

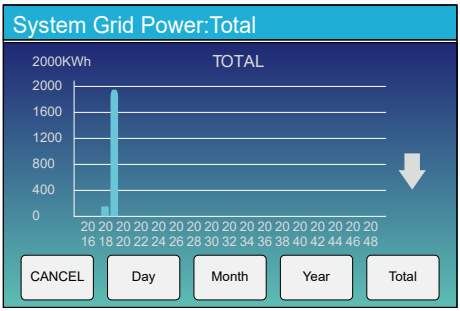

Solar power curve for daily, monthly, yearly and total can be roughly checked on the LCD, for more accuracy power generation, pls check on the monitoring system. Click the up and down arrow to check power curve of different period.

5.4 System Setup Menu

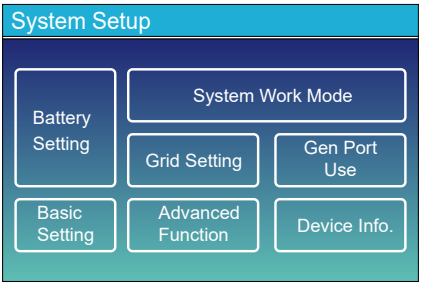

This is System Setup page.

5.5 Basic Setup Menu

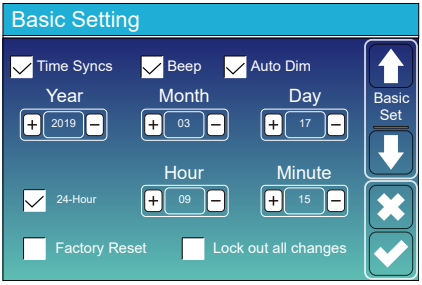

Factory Reset: Reset all parameters of the inverter.
Lock out all changes: Enable this menu for setting parameters that require locking and cannot be set up. Before performing a successful factory reset and locking the systems, to keep all changes you need to type in a password to enable the setting.
The password for factory settings is 9999 and for lock out is 7777.

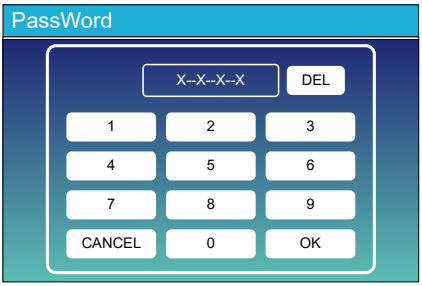

Factory Reset PassWork: 9999

Lock out all changes PassWork: 7777

5.6 Battery Setup Menu

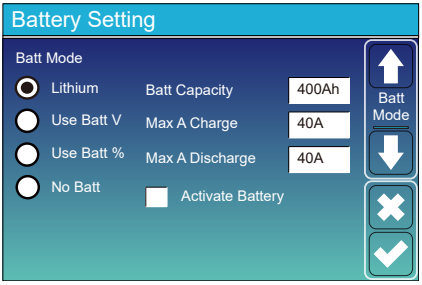

Battery capacity: it tells Deye hybrid inverter to know your battery bank size.

Use Batt V: Use Battery Voltage for all the settings (V).

Use Batt %: Use Battery SOC for all the settings (%).

Max. A charge/discharge: Max battery charge/discharge current(0-115A for 5KW model, 0-90A for 3.6KW model). For AGM and Flooded, we recommend Ah battery size x 20%= Charge/Discharge amps.
. For Lithium, we recommend Ah battery size x 50% = Charge/Discharge amps.
. For Gel, follow manufacturer' s instructions.

No Batt: tick this item if no battery is connected to the system.

Active battery: This feature will help recover a battery that is over discharged by slowly charging from the solar array or grid.

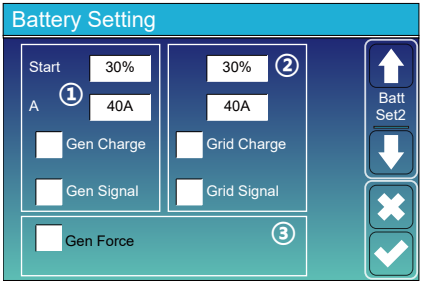

This is Battery Setup page. ① ③

Start =30%: Percent S.O.C at 30% system will AutoStart a connected generator to charge the battery bank.

A = 40A: Charge rate of 40A from the attached generator in Amps.

Gen Charge: uses the gen input of the system to charge battery bank from an attached generator.

Gen Signal: Normally open relay that closes when the Gen Start signal state is active.

Gen Force: When the generator is connected, it is forced to start the generator without meeting other conditions.

This is Grid Charge, you need select. ②

Start =30%: No use， Just for customization.

A = 40A: It indicates the Current that the Grid charges the Battery.

Grid Charge: It indicates that the grid charges the battery.

Grid Signal: Disable.

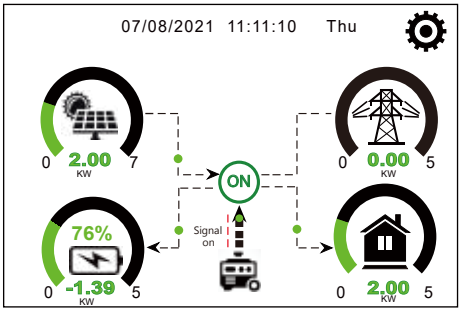

This page tells the PV and diesel generator power the load and battery.

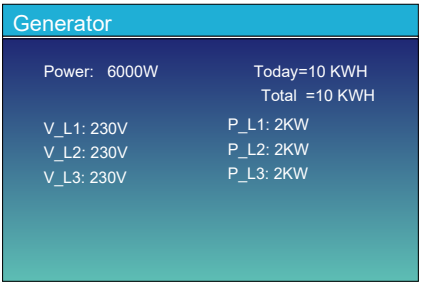

This page tells generator output voltage, frequency, power. And, how much energy is used from generator.

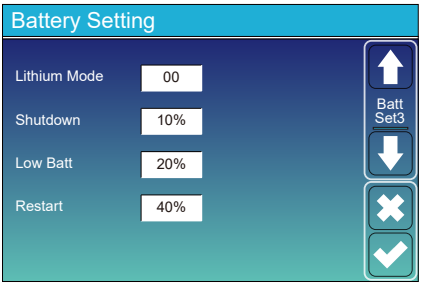

Lithium Mode: This is BMS protocol.Please reference the document(Approved Battery).

Shutdown 10%: It indicates the inverter will shutdown if the SOC below this value.

Low Batt 20%: It indicates the inverter will alarm if the SOC below this value.

Restart 40%: Battery voltage at 40% AC output will resume.

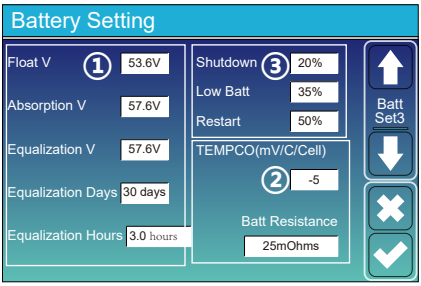

There are 3 stages of charging the Battery . ①

This is for professional installers, you can keep it if you do not know. ②

Shutdown 20%: The inverter will shutdown if the SOC below this value.

Low Batt 35%: The inverter will alarm if the SOC below this value. ③

Restart 50%: Battery SOC at 50% AC output will resume.

Recommended battery settings

Battery Type	*Absorption Stage*	*Float Stage*	*Torque value (every 30 days 3hr)*
AGM (or PCC)	14.2v (57.6v)	13.4v (53.6v)	14.2v(57.6v)
Gel	14.1v (56.4v)	13.5v (54.0v)	
Wet	14.7v (59.0v)	13.7v (55.0v)	14.7v(59.0v)
Lithium	Follow its BMS voltage parameters		

5.7 System Work Mode Setup Menu

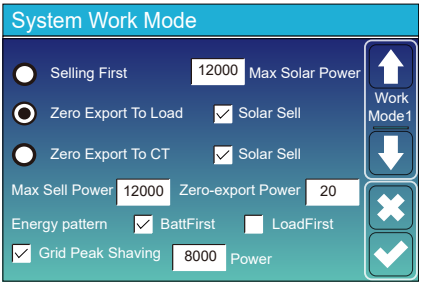

Work Mode

Selling First: This Mode allows hybrid inverter to sell back any excess power produced by the solar panels to the grid. If time of use is active, the battery energy also can be sold into grid.

The PV energy will be used to power the load and charge the battery and then excess energy will flow to grid.

Power source priority for the load is as follows:

1. Solar Panels.
2. Grid.
3. Batteries (until programable % discharge is reached).

Zero Export To Load: Hybrid inverter will only provide power to the backup load connected. The hybrid inverter will neither provide power to the home load nor sell power to grid. The built-in CT will detect power flowing back to the grid and will reduce the power of the inverter only to supply the local load and charge the battery.

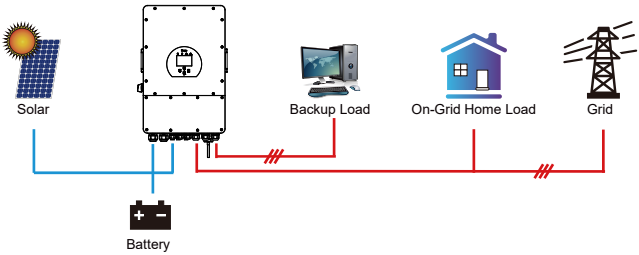

Zero Export To CT: Hybrid inverter will not only provide power to the backup load connected but also give power to the home load connected. If PV power and battery power is insufficient, it will take grid energy as supplement. The hybrid inverter will not sell power to grid. In this mode, a CT is needed. The installation method of the CT please refer to chapter 3.6 CT Connection. The external CT will detect power flowing back to the grid and will reduce the power of the inverter only to supply the local load, charge battery and home load.

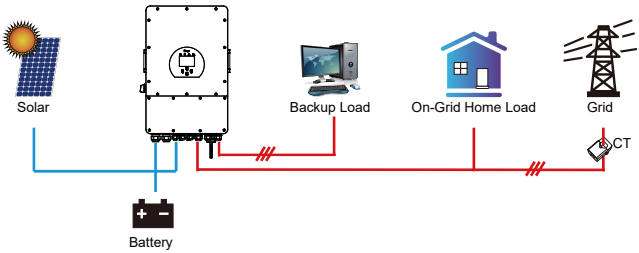

Solar Sell: “Solar sell” is for Zero export to load or Zero export to CT: when this item is active, the surplus energy can be sold back to grid. When it is active, PV Power source priority usage is as follows: load consumption and charge battery and feed into grid.

Max. sell power: Allowed the maximum output power to flow to grid.

Zero-export Power: for zero-export mode, it tells the grid output power. Recommend to set it as 20-100W to ensure the hybrid inverter won' t feed power to grid.

Energy Pattern: PV Power source priority.

Batt First: PV power is firstly used to charge the battery and then used to power the load. If PV power is insufficient, grid will make supplement for battery and load simultaneously.

Load First: PV power is firstly used to power the load and then used to charge the battery. If PV power is insufficient, Grid will provide power to load.
Max Solar Power: allowed the maximum DC input power.

Grid Peak-shaving: when it is active, grid output power will be limited within the set value. If the load power exceeds the allowed value, it will take PV energy and battery as supplement. If still can’t meet the load requirement, grid power will increase to meet the load needs.

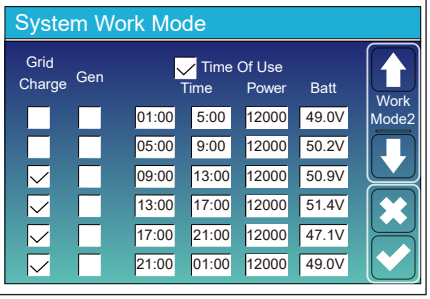

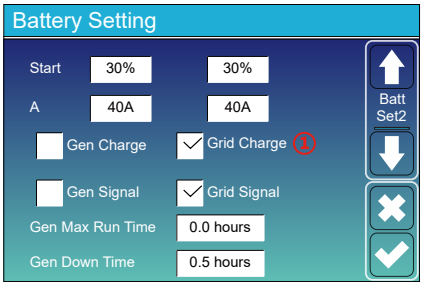

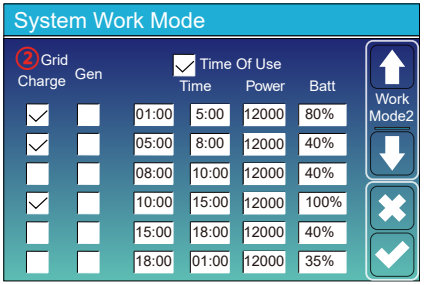

Time of use: it is used to program when to use grid or generator to charge the battery, and when to discharge the battery to power the load. Only tick "Time Of Use" then the follow items (Grid, charge, time, power etc.) will take effect.
Note: when in selling first mode and click time of use, the battery power can be sold into grid.
Grid charge: utilize grid to charge the battery in a time period.
Gen charge: utilize diesel generator to charge the battery in a time period.
Time: real time, range of 01:00-24:00.
Note: when the grid is present, only the “time of use” is ticked, then the battery will discharge. Otherwise, the battery won’t discharge even the battery SOC is full. But in the off-grid mode (when grid is not available, inverter will work in the off-grid mode automatically).
Power: Max. discharge power of battery allowed.
Batt(V or SOC %): battery SOC % or voltage at when the action is to happen.

For example

During 01:00-05:00,
if battery SOC is lower than 80%, it will use grid to charge the battery until battery SOC reaches 80%.
During 05:00-08:00,
if battery SOC is higher than 40%, hybrid inverter will discharge the battery until the SOC reaches 40%. At the same time, if battery SOC is lower than 40%, then grid will charge the battery SOC to 40%.
During 08:00-10:00,
if battery SOC is higher than 40%, hybrid inverter will discharge the battery until the SOC reaches 40%.
During 10:00-15:00,
when battery SOC is higher than 80%, hybrid inverter will discharge the battery until the SOC reaches 80%.
During 15:00-18:00,
when battery SOC is higher than 40%, hybrid inverter will discharge the battery until the SOC reaches 40%.
During 18:00-01:00,
when battery SOC is higher than 35%, hybrid inverter will discharge the battery until the SOC reaches 35%.

5.8 Grid Setup Menu

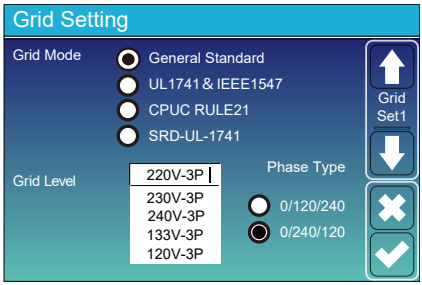

Please select the correct Grid Mode in your local area. If you are not sure, please choose General Standard.

Please select the correct Grid Type in your local area, otherwise the machine will not work or be damaged.

Phase type: When the inverter LCD shows “W03”which means the grid phase is error, please try to use "0/120/240".

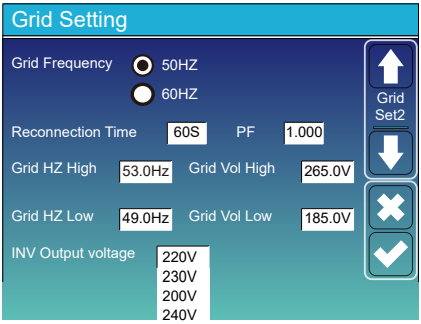

UL1741&IEEE1547，CPUC RULE21，SRD-UL-1741

No need to set the function of this interface.

General Standard

Please select the correct Grid Frequency in your local area.
You can hole this in default value.

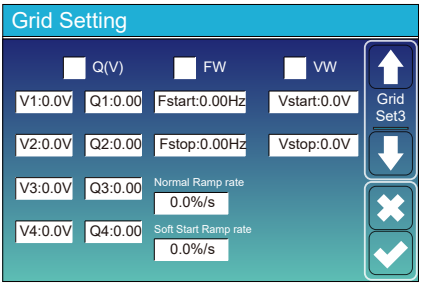

For California only.

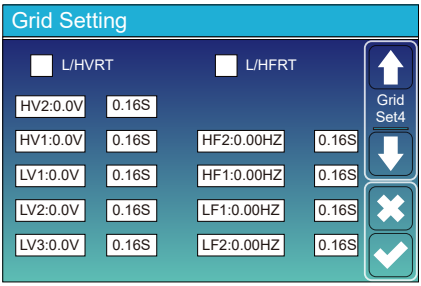

For California only.

5.9 Generator Port Use Setup Menu

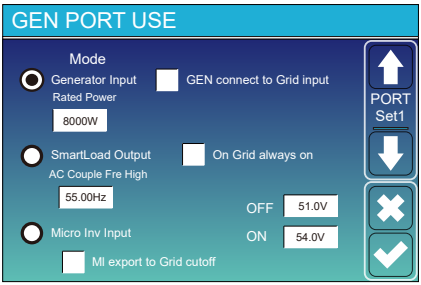

Generator input rated power: allowed Max. power from diesel generator.
GEN connect to grid input: connect the diesel generator to the grid input port.
Smart Load Output: This mode utilizes the Gen input connection as an output which only receives power when the battery SOC and PV power is above a user programmable threshold.
e.g. ON: 100%, OFF=95%: When the PV power exceeds 500W, and battery bank SOC reaches 100%, Smart Load Port will switch on automatically and power the load connected. When the battery bank SOC < 95% , the Smart Load Port will switch off automatically.

Smart Load OFF Batt
• Battery SOC at which the Smart load will switch off.
Smart Load ON Batt
• Battery SOC at which the Smart load will switch on. simultaneously and then the Smart load will switch on.
On Grid always on: When click "on Grid always on" the smart load will switch on when the grid is present.
Micro Inv Input: To use the Generator input port as a micro-inverter on grid inverter input (AC coupled), this feature will also work with "Grid-Tied" inverters.

* **Micro Inv Input OFF**: when the battery SOC exceeds setting value, Microinveter or grid-tied inverter will shut down.
* **Micro Inv Input ON**: when the battery SOC is lower than setting value, Microinveter or grid-tied inverter will start to work.
AC Couple Fre High: If choosing“Micro Inv input”, as the battery SOC reaches gradually setting value (OFF), During the process, the microinverter output power will decrease linear. When the battery SOC equals to the setting value (OFF), the system frequency will become the setting value (AC couple Fre high) and the Microinverter will stop working.
MI export to grid cutsoff: Stop exporting power produced by the microinverter to the grid.

* **Note**: Micro Inv Input OFF and On is valid for some certain FW version only.

5.10 Advanced Function Setup Menu

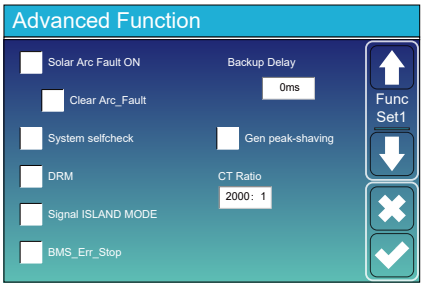

Solar Arc Fault ON: This is only for US.
System selfcheck: Disable. this is only for factory.
Gen Peak-shaving: Enable When the power of the generator exceeds the rated value of it, the inverter will provide the redundant part to ensure that the generator will not overload.
DRM: For AS4777 standard
Backup Delay: Reserved
BMS_Err_Stop: When it is active, if the battery BMS failed to communicate with inverter, the inverter will stop working and report fault.
Signal island mode: Reserved.

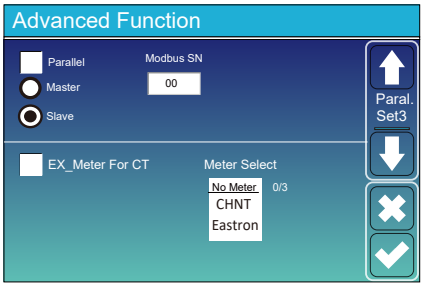

Ex_Meter For CT: when using zero-export to CT mode, the hybrid inverter can select EX_Meter For CT function and use the different meters.e.g.CHNT and Eastron.

5.11 Device Info Setup Menu

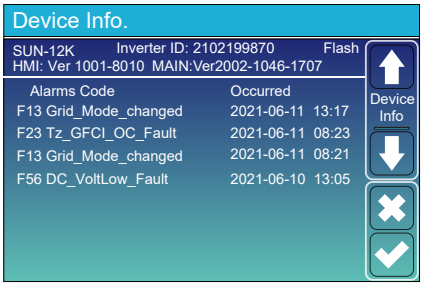

This page show Inverter ID, Inverter version and alarm codes.

HMI: LCD version

MAIN: Control board FW version

6. Mode

Mode I:Basic

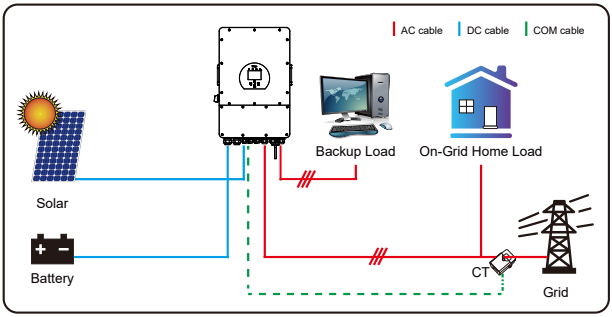

Mode II: With Generator

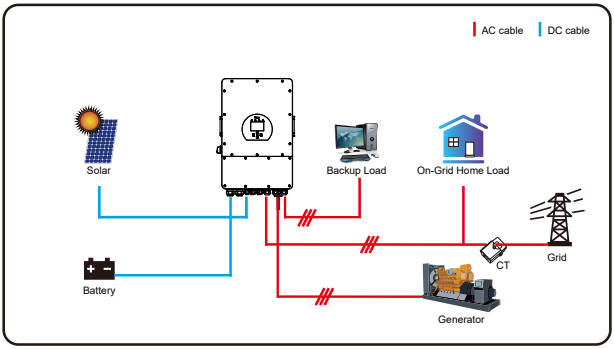

Mode III: With Smart-Load

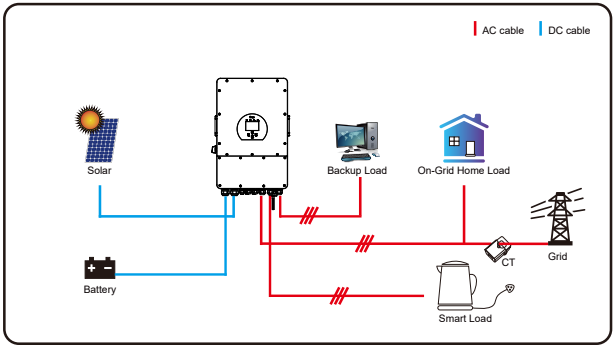

Mode IV: AC Couple

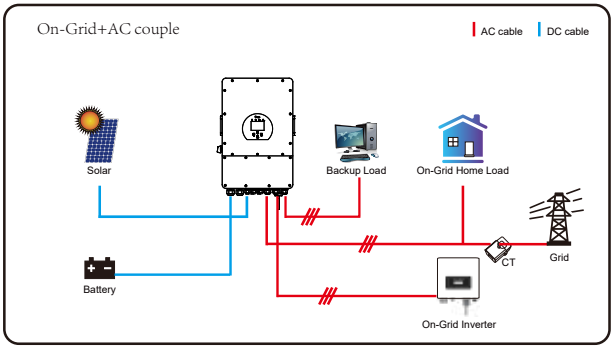

The 1st priority power of the system is always the PV power, then 2nd and 3rd priority power will be the battery bank or grid according to the settings. The last power backup will be the Generator if it is available.

7. Limitation of Liability

In addition to the product warranty described above, the state and local laws and regulations provide financial compensation for the product's power connection (including violation of implied terms and warranties). The company hereby declares that the terms and conditions of the product and the policy cannot and can only legally exclude all liability within a limited scope.

Error code	Description	Solutions
F01	DC input polarity reverse fault	1，Check the PV input polarity 2，Seek help from us, if can not go back to normal state.
F07	DC_START_Failure	1，The BUS voltage can't be built from PV or battery. 2，Restart the inverter, If the fault still exists, please contact us for help
F13	working mode change	1. When the grid type and frequency changed it will report F13; 2. When the battery mode was changed to "No battery" mode,it will report F13; 3. For some old FW version, it will report F13 when the system work mode changed; 4, Generally, it will disappear automatically when shows F13; 5. If still same, and turn off the DC switch and AC switch and wait for one minute and then turn on the DC/AC switch; 6. Seek help from us, if can not go back to normal state.
F15	AC over current fault of software	AC side over current fault 1. Please check whether the backup load power and common load power are within the range; 2. Restart and check whether it is in normal; 3. Seek help from us, if can not go back to normal state.
F16	AC leakage current fault	Leakage current fault 1, Check the PV side cable ground connection 2, Restart the system 2-3 times 3, if the fault still existing, please contact us for help.
F18	AC over current fault of hardware	AC side over current fault 1. Please check whether the backup load power and commonload power are within the range; 2. Restart and check whether it is in normal; 3. Seek help from us, if cannot go back to normal state.
F20	DC over current fault ofthe hardware	DC side over current fault 1. Check PV module connect and battery connect; 2. When in the off-grid mode, the inverter startup with big power load, it may report F20. Please reduce the load power connected; 3. Turn off the DC switch and AC switch and then wait one minute, then turn on the DC/AC switch again; 4. Seek help from us, if can not go back to normal state.

Error code	Description	Solutions
F21	Tz_HV_Overcurr_fault	BUS over current. 1, Check the PV input current and battery current setting 2. Restart the system 2~3 times. 3. If the fault still exists, please contact us for help.
F22	Tz_EmergStop_Fault	Remotely shutdown 1, it tells the inverter is remotely controlled.
F23	Tz_GFCI_OC_ current is transient over current	Leakage current fault 1. Check PV side cable ground connection. 2. Restart the system 2~3 times. 3. If the fault still exists, please contact us for help.
F24	DC insulation failure	PV isolation resistance is too low 1. Check the connection of PV panels and inverter is firmly and correctly; 2. Check whether the PE cable of inverter is connected to ground; 3. Seek help from us, if can not go back to normal state.
F26	The DC busbar isunbalanced	1. Please wait for a while and check whether it is normal; 2. When the load power of 3 phases is big different, it will report the F26. 3 .When there’ s DC leakage current, it will report F26 4. Restart the system 2~3 times. 5. Seek help from us, if can not go back to normal state.
F48	AC lower frequency	Grid frequency out of range 1. Check the frequency is in the range of specification or not; 2. Check whether AC cables are firmly and correctly connected; 3. Seek help from us, if can not go back to normal state.
F29	Parallel CAN Bus fault	1. When in parallel mode, check the parallel communication cable connection and hybrid inverter communication address setting; 2. During the parallel system startup period, inverters will report F29.But when all inverters are in ON status, it will disappear automatically; 3. If the fault still exists, please contact us for help.
F34	AC Overcurrent fault	1, Check the backup load connected, make sure it is in allowed power range 2, If the fault still exists, please contact us for help
F41	Parallel system stop	1, Check the hybrid inverter work status. If there’s 1pcs hybrid inverter shutdown, all hybrid inverters will report F41 fault. 2, If the fault still exists, please contact us for help
F42	AC line low voltage	Grid voltage fault 1. Check the AC voltage is in the range of standard voltage inspecification; 2. Check whether grid AC cables are firmly and correctly connected; 3. Seek help from us, if can not go back to normal state.

Error code	Description	Solutions
F46	backup battery fault	1，Please check each battery status, such as voltage/ SOC and parameters etc., and make sure all the parameters are same. 2，If the fault still exists, please contact us for help
F47	AC over frequency	Grid frequency out of range 1. Check the frequency is in the range of specification or not; 2. Check whether AC cables are firmly and correctly connected; 3. Seek help from us, if can not go back to normal state.
F48	AC lower frequency	Grid frequency out of range 1. Check the frequency is in the range of specification or not; 2. Check whether AC cables are firmly and correctly connected; 3. Seek help from us, if can not go back to normal state.
F55	DC busbar voltage is too high	BUS voltage is too high 1. Check whether battery voltage is too high; 2. check the PV input voltage, make sure it is within the allowed range; 3. Seek help from us, if can not go back to normal state.
F56	DC busbar voltage is too low	Battery voltage low 1. Check whether battery voltage is too low; 2. If the battery voltage is too low, using PV or grid to charge thebattery; 3. Seek help from us, if can not go back to normal state.
F58	BMS communication fault	1, it tells the communication between hybrid inverter and battery BMS disconnected when “BMS_Err-Stop” is active” 2, if don’t want to see this happen, you can disable “BMS_Err-Stop” item on the LCD. 3, If the fault still exists, please contact us for help
F62	DRMs0_stop	1, the DRM function is for Australia market only. 2, Check the DRM function is active or not 3, Seek help from us, if can not go back to normal state after restart the system
F34	AC Overcurrent fault	1, Check the backup load connected, make sure it is in allowed power range 2, If the fault still exists, please contact us for help
F63	ARC fault	1. ARC fault detection is only for US market; 2. Check PV module cable connection and clear the fault; 3. Seek help from us, if can not go back to normal state
F64	Heat sink high temperaturefailure	Heat sink temperature is too high 1. Check whether the work environment temperature is too high; 2. Turn off the inverter for 10mins and restart; 3. Seek help from us, if can not go back to normal state.

Chart 7-1 Fault information

Under the guidance of our company, customers return our products so that our company can provide service of maintenance or replacement of products of the same value. Customers need to pay the necessary freight and other related costs. Any replacement or repair of the product will cover the remaining warranty period of the product. If any part of the product or product is replaced by the company itself during the warranty period, all rights and interests of the replacement product or component belong to the company.
Factory warranty does not include damage due to the following reasons:

· Damage during transportation of equipment;
· Damage caused by incorrect installation or commissioning;
· Damage caused by failure to comply with operation instructions, installation instructions or maintenance instructions;
· Damage caused by attempts to modify, alter or repair products;
· Damage caused by incorrect use or operation;
· Damage caused by insufficient ventilation of equipment;
· Damage caused by failure to comply with applicable safety standards or regulations;
· Damage caused by natural disasters or force majeure (e.g. floods, lightning, overvoltage, storms, fires, etc.)

In addition, normal wear or any other failure will not affect the basic operation of the product. Any external scratches, stains or natural mechanical wear does not represent a defect in the product.

8. Datasheet

Model	***SUN-5K-SG04LP3***	***SUN-6K-SG04LP3***	***SUN-8K-SG04LP3***	***SUN-10K-SG04LP3***	***SUN-12K-SG04LP3***
Battery Input Date					
Battery Type	Lead-acid or Li-Ion				
Battery Voltage Range(V)	40-60V				
Max. Charging Current(A)	120A	150A	190A	210A	240A
Max. Discharging Current(A)	120A	150A	190A	210A	240A
Charging Curve	3 Stages / Equalization				
External Temperature Sensor	yes				
Charging Strategy for Li-Ion Battery	Self-adaption to BMS				
PV String Input Data					
Max. DC Input Power(W)	6500W	7800W	10400W	13000W	15600W
PV Input Voltage(V)	550V (160V~800V)				
MPPT Range(V)	200V-650V				
Start-up Voltage(V)	160V				
PV Input Current(A)	13A+13A	13A+13A	13A+13A	26A+13A	26A+13A
Max.PV Isc(A)	17A+17A	17A+17A	17A+17A	34A+17A	34A+17A
No. of MPPT Trackers	2				
No. of Strings Per MPPT Tracker	1+1	1+1	1+1	2+1	2+1
AC Output Data					
Rated AC Output and UPS Power(W)	5000	6000	8000	10000	12000
Max. AC Output Power(W)	5500	6600	8800	11000	13200
Peak Power(off grid)	2 times of rated power, 10 S				
AC Output Rated Current(A)	7.6/7.2A	9.1/8.7A	12.1/11.6A	15.2/14.5A	18.2/17.4A
Max. AC Current(A)	11.4/10.9A	13.6/13A	18.2/17.4A	22.7/21.7A	27.3/26.1A
Max. Continuous AC Passthrough(A)	45A				
Output Frequency and Voltage	50/60Hz; 380/400Vac (Three phase)				
Grid Type	Three Phase				
Current Harmonic Distortion	THD<3% (Linear load<1.5%)				
Efficiency					
Max. Efficiency	97.60%				
Euro Efficiency	97.00%				
MPPT Efficiency	>99%				
Protection					
PV Arc Fault Detection	Integrated				
PV Input Lightning Protection	Integrated				
Anti-islanding Protection	Integrated				
PV String Input Reverse Polarity Protection	Integrated				
Insulation Resistor Detection	Integrated				
Residual Current Monitoring Unit	Integrated				
Output Over Current Protection	Integrated				
Output Shorted Protection	Integrated				
Output Over Voltage Protection	DC Type II / AC Type III				

Certifications and Standards	
Grid Regulation	CEI 0-21,VDE-AR-N 4105,NRS 097,IEC 62116,IEC 61727,G99,G98, VDE 0126-1-1,RD 1699,C10-11
EMC/Safety Regulation	IEC/EN 62109-1,IEC/EN 62109-2,IEC/EN 61000-6-1, IEC/EN 61000-6-2,IEC/EN 61000-6-3,IEC/EN 61000-6-4
General Data	
Operating Temperature Rande(℃)	-45~60℃, >45℃ Derating
Cooling	Smart cooling
Noise(dB)	≤45 dB(A)
Communication with BMS	RS485; CAN
Weight(kg)	33.6
Size(mm)	422W×699.3H×279D
Protection Degree	IP65
Installation Style	Wall-mounted
Warranty	5 years

9. Appendix I

Definition of RJ45 Port Pin for BMS

No.	RS485 Pin
1	485_B
2	485_A
3	--
4	CAN-H
5	CAN-L
6	GND_485
7	485_A
8	485_B

BMS Port

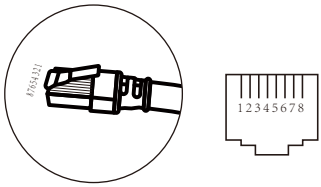

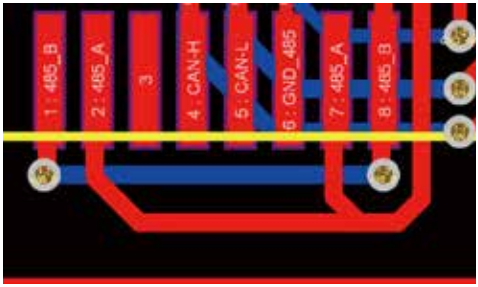

Definition of RJ45 Port Pin for Meter-485

No.	Meter-485 Pin
1	METER-485_B
2	METER-485_A
3	COM-GND
4	--
5	--
6	COM-GND
7	METER-485_A
8	METER-485_B

Meter-485 Port

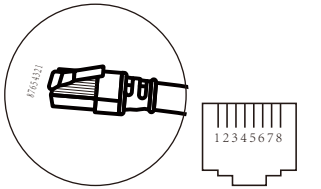

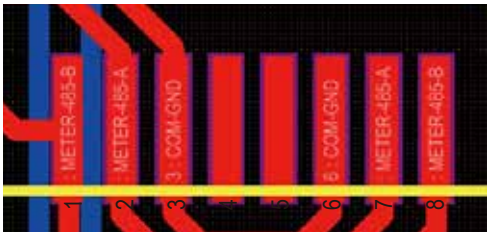

Definition of RJ45 Port Pin of "Modbus port" for remotely monitoring

No.	Modbus port
1	485_B
2	485_A
3	GND_485
4	--
5	--
6	GND_485
7	485_A
8	485_B

Modbus port

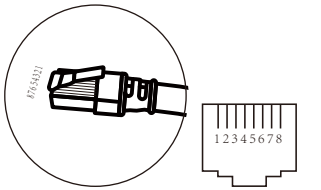

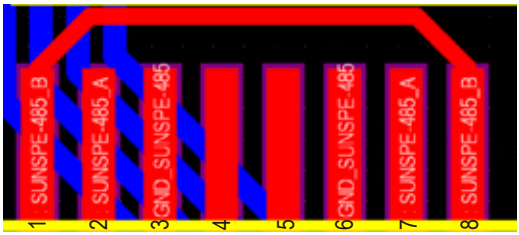

RS232

No.	WIFI/RS232
1	D-GND
2	
3	
4	
5	TX
6	RX
7	12Vdc
8	
9	

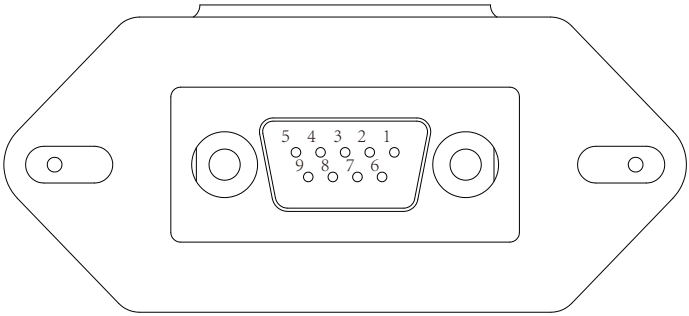

WIFI/RS232

This RS232 port is used to connect the wifi datalogger

10. Appendix II

1. Split Core Current Transformer (CT) dimension: (mm)
2. Secondary output cable length is 4m.

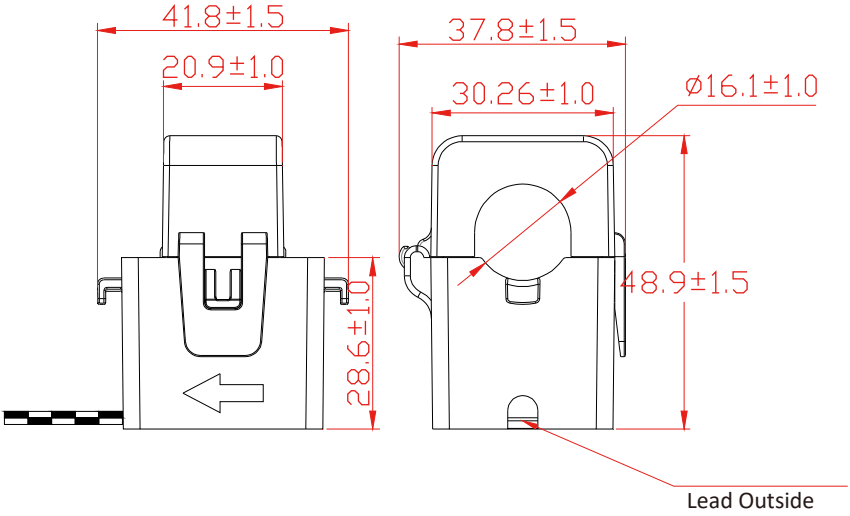

NINGBO DEYE INVERTER TECHNOLOGY CO., LTD.

Add: No.26-30, South Yongjiang Road, Beilun, 315806, Ningbo, China

Tel: +86 (0) 574 8622 8957

Fax: +86 (0) 574 8622 8852

E-mail: service@deye.com.cn

Web: www.deyeinverter.com

30240301000690 Ver: 2.2, 2022-04-13